NO. 22 NOTES FROM THE SHOP $2.50

Woodsmith®

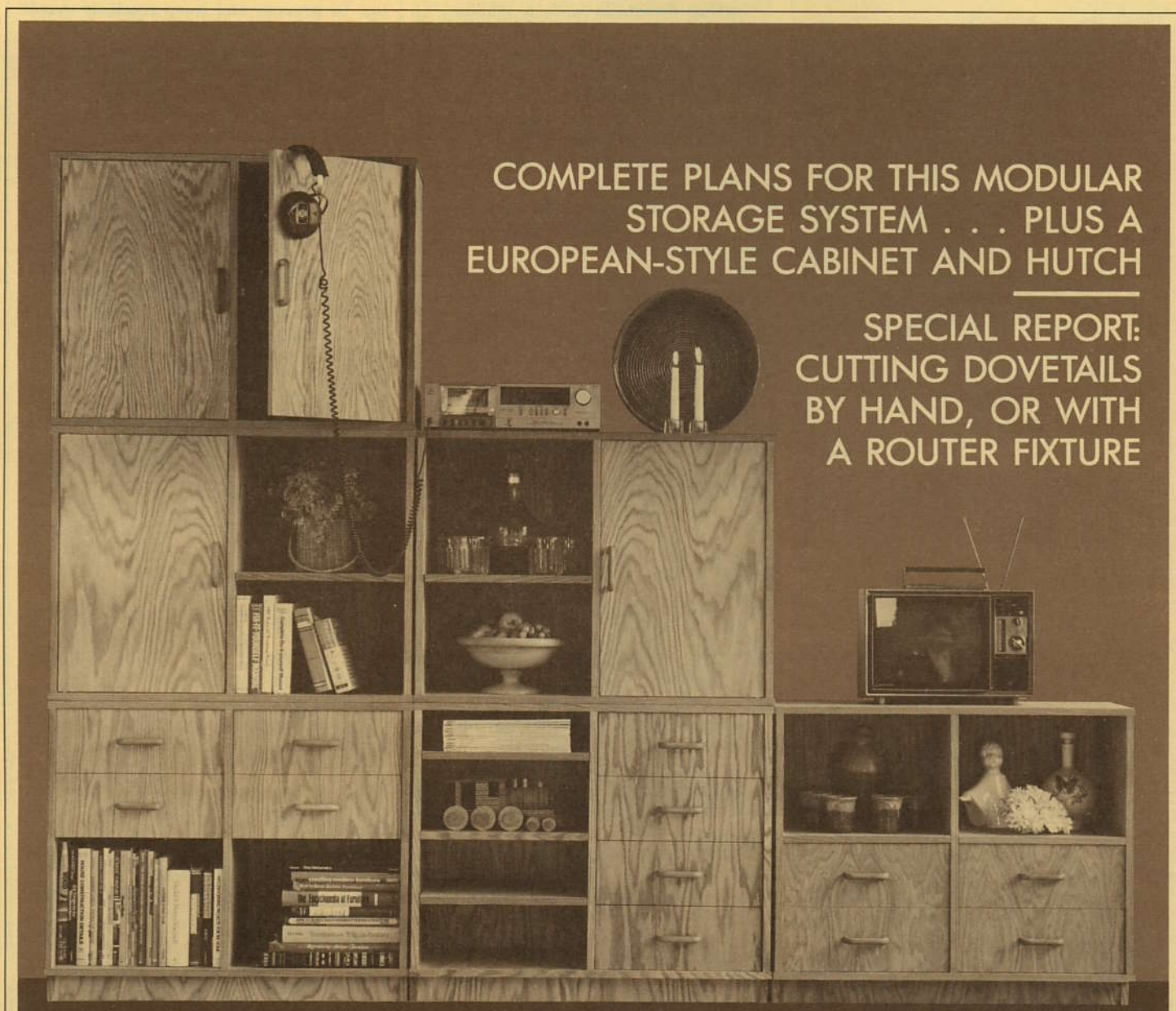

COMPLETE PLANS FOR THIS MODULAR STORAGE SYSTEM . . . PLUS A EUROPEAN-STYLE CABINET AND HUTCH

SPECIAL REPORT: CUTTING DOVETAILS BY HAND, OR WITH A ROUTER FIXTURE

Modular Storage System

EXCLUSIVE PLANS FOR THIS COMPLETELY FLEXIBLE SYSTEM

Woodsmith

Number 22 July, 1982

Editor
Donald B. Peschke

Design Director
Ted Kralicek

Art Director
Jon Snyder

Assistant Editor
Steve Krohmer

Graphic Designers
David Kreyling
Marcia Simmons

Subscription Manager
Sandy J. Baum

Subscription Assistants
Christel Bork
Vicky Robinson
Kim Melton
Jackie Stroud

Dir. Computer Operations
Ken Miner

Administrative Assistant
Cheryl Scott

WOODSMITH (ISSN 0164-4114) is published bimonthly (January, March, May, July, September, November) by Woodsmith Publishing Co., 2200 Grand Ave., Des Moines, Iowa 50312.
WOODSMITH is a registered trademark of the Woodsmith Publishing Co.
©**Copyright 1982** by Woodsmith Publishing Co. All Rights Reserved.
Subscriptions: One year (6 issues) $10, Two years (12 issues) $18. Single copy price, $2.50 (Canada and Foreign: add $2 per year.)
Change Of Address: Please be sure to include both your old and new address and a mailing label from a recent issue.
Postmaster: Send change of address notice, Form 3579, to Woodsmith Publishing Co., 2200 Grand Ave., Des Moines, Iowa 50312.

Sawdust

ABOUT THIS ISSUE. If you've been reading this column for the past few issues, you know that I keep coming up with reasons why we didn't run an article on cutting lap (half-blind) dovetails. Well, we finally got it in this issue. And we managed to do it the way we originally intended: showing both hand-cut and machine-cut dovetails.

Cutting dovetails with a machine (a router) certainly eliminates that old-time craftsmanship. But it gets the job done. And I was quite content to use the router when it came time to build the gaggle of drawers needed for the modular storage system (shown on page 12).

Yet, I have to admit something. I really enjoy the hand-work that goes into lap dovetails when it's done the old-fashioned way. It's almost like working on one of those intricate Japanese joints. I can sit back in the shop and saw and tap and chisel to my heart's content. It's enjoyable work.

MODULAR STORAGE. For those of you who get into the design of projects, the modular storage system in this issue ought to strike a responsive chord. No, there's nothing particularly fancy about it. And if you want to get really cynical, this whole project is just a bunch of boxes stacked on top of one another.

But what intrigues me about this project is the complete flexibility you have . . . *after* the project is built. The door, drawers and shelves can all be moved around to suit whatever need (or whim) arises.

All of this flexibility is due in part to the design (give Ted a pat on the back) and in part to the special hardware we used. All of the hardware (except for the rosan inserts) for the modular storage system and for the cabinet/hutch came from The Woodworkers' Store catalog.

If you don't have this catalog, it's worth sending for. Send $1 to The Woodworkers' Store, 21801 Industrial Blvd., Rogers, Minnesota 55374.

ROUTER TABLE. Some of you may have seen our ad in Workbench magazine for "the complete plans for a Router Table." In that ad I mentioned that it's a six-page Plan Booklet that includes plans for a full-size floor model.

Just so you know that our regular subscribers are not missing out on anything, this is the same router table we featured in *Woodsmith* No. 20. And in this issue we're showing the legs and storage unit we added to make it a floor model.

Since we gave the Plan Booklet six pages, we had more room for more (and larger) drawings. If you'd like this new Plan Booklet, send $1 to us and we'll get it in the mail to you.

NEW FACES. The gang here at *Woodsmith* is turning into a thundering herd. Since the last issue, we've added four new faces.

Ken Miner has been associated with *Woodsmith* almost from the beginning — he developed the computer programs we use to process and keep track of everybody's name and address.

We've just undergone a major expansion of our computer operation, and Ken has agreed to work with us full-time to keep those machines whirling and clicking.

As a side note, I've even joined the computer age. Instead of pounding keys on the old typewriter to write the copy, now I "key-in" on a word processor. (Datapoint is the brand.) It's a fancy machine that saves a lot of time.

Dave Kreyling has joined the art team to help Ted with the drawings. Along with gaining an appreciation for the artwork in *Woodsmith*, Dave is quickly learning the amount of work that goes into each drawing (3 to 4 hours per drawing). Since we typically have about 80 drawings in each issue, we needed some help with this workload, and Dave is anxious to work.

Vickie Robinson, Kim Melton and Jackie Stroud have all signed on to help with the mail opening, processing and shipping. Ted likes to say that this whole business comes in in a mail bag and goes out in a mail bag. I think Vickie, Kim and Jackie will help keep those mail bags moving.

THE SCHEDULE. This issue of *Woodsmith* will probably be in the mail during the week of August 16th. That's about six weeks behind our intended schedule.

Although I know it's frustrating to all of our subscribers, I've never wanted to keep a rigid schedule for publishing each issue. That's one of the reasons we refer to each issue by the issue Number (this one is Number 22), rather than the date (the July issue.)

But you're running a business, Don, why don't you keep to a schedule?

When we get behind, there's a tendency to want to slap together an issue just to meet the schedule. But that's not fair. I'd rather put full effort into each issue . . . even if it means we'll be "late". To me, it's better to watch the quality of what goes into *Woodsmith*, rather than to watch the calendar for when it comes out.

However, I will guarantee that we'll publish six issues a year, and we'll put 100% effort in each issue. With that in mind, our next mailing (*Woodsmith* No. 23) should be in the mail during the week of October 4th, 1982.

Tips & Techniques

EVENLY SPACED HOLES

The article on building the wall shelf in *Woodsmith* No. 20 reminded me of how many times I've drilled holes in the sides of cabinets only to find that I've spaced them a little bit differently on one side of the cabinet than the other. The result is a shelf that teeters.

Now I use a jig for boring holes in cabinet sides which assures that the shelves will sit solidly on all four corners. Even if the holes are slightly unequal in spacing up and down the sides, the shelf will sit solidly on all four corners because both sides of

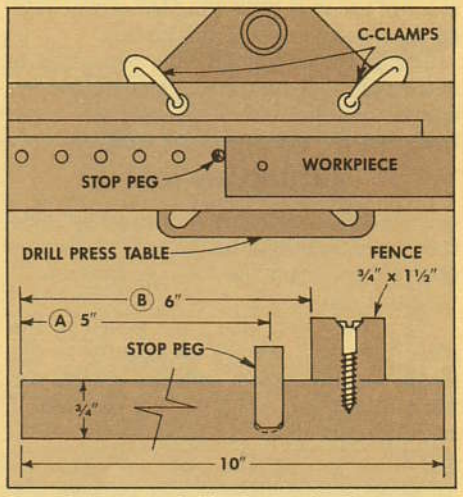

the cabinet are drilled exactly the same.

The jig consists of a piece of plywood, a fence, and a stop-peg. The jig I use is 10" wide, 48" long, and is large enough to handle almost any project.

To lay out the jig, draw two lines parallel to one edge of the baseboard, one 5"(A) from the edge for a row of ½" holes for the stop pegs. And the other line (B) is drawn 6" from the edge, for aligning the front edge of the fence.

The holes are laid out carefully along line A and are spaced the same distance apart the finished holes will be (I use 1" spacings). Drill the holes to within about ⅛" of going through the baseboard.

A 1½" wide fence is attached to the baseboard along line B. This leaves about 2" behind the fence to clamp the baseboard to the drill press table.

The stop peg is merely a dowel about 4" long with a slight chamfer on one end.

To use the jig on the drill press, insert the stop peg into a hole in the jig that is far enough toward one end to accommodate moving the workpiece through from the first hole to the last. Then hold the work piece against the fence and the stop peg. Align the baseboard so that the spur of the bit is directly over the location of the first hole. Then clamp the baseboard to the drill press table with C-clamps.

Drill the first hole and then move the stop peg to the next hole and reposition the board to drill the second hole. Larger spacings between holes being drilled can be made by skipping holes in the baseboard.

This jig has saved me hours of layout time and all my holes are drilled uniformly. It really works.

Carl Hagert
Uncasville, Connecticut

SOLID WOOD CORNERS FOR PLYWOOD

With the limited equipment I have in the shop, I've always had problems cutting mitered corners on plywood cabinets. It seems that the veneer is always splitting or the corners don't meet exactly as planned. And because of the thin veneer on the plywood, you can't even sand them flush.

Consequently, I've adopted a corner joint which is very easy to cut, easy to glue and has the appearance of a mitered corner. And it can be sanded to fit perfectly flush with the plywood cabinet sides.

The joint is a half rabbet with a solid wood corner. First I cut a rabbet in the side that's only wide enough to overlap one half of the top piece (this is what I call a half rabbet). Then the cabinet is glued together, without any corner strips.

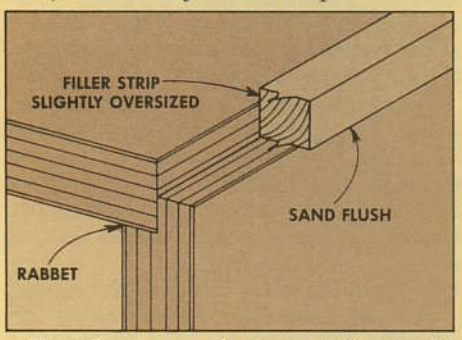

Then I cut a small corner strip of solid wood approximately ⅛" oversized. This strip is glued into the corner and sanded flush with the plywood surface.

Jan Pedersen
Kamloops, British Columbia

RADIAL ARM CUT-OFF JIG

Squaring up and/or cutting to length stock that's wider than the reach of the radial arm saw (14") has always been somewhat of a problem for me. Even on a table saw, there's just not enough support to cut off a wide table top (30") with good accuracy.

I came up with a jig for the radial arm saw that can handle cuts up to 30" without losing any accuracy. The jig itself consists of two 2'x4' pieces of ¾" plywood, and two 36" aluminum wall standards.

I started by dadoing two grooves (⅝" wide and as deep as ½ the thickness of the shelf standard) down the length of the plywood in exactly the same position on both pieces. The piece that becomes the top is flipped over and a ¾"x½" dado is cut for the fence. This dado is cut across the width of the plywood, 3" in from the end, and a ¾"x2½" fence is then glued into the dado.

On the base piece, I attached a ¾"x1½" strip to the back edge so that the jig can be secured with the radial arm saw's clamp

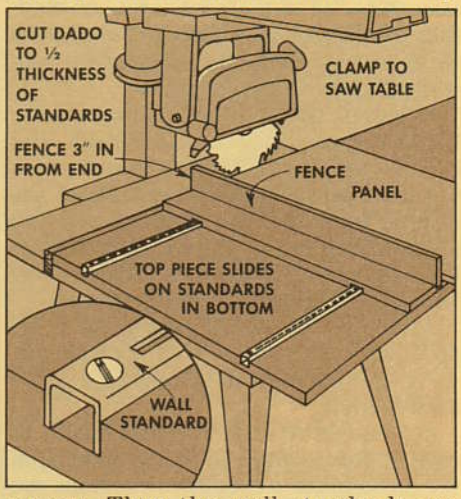

screws. Then the wall standards are screwed into the dados on the opposite side.

I've found that the wall standards in the baseboard will slide easily in dados of the top if all the wooden parts are given a coat of sealer, and then waxed.

Myron Jacobsen
Winchester, Kentucky

SEND IN YOUR IDEAS

We invite you to share your woodworking tips and techniques with other readers of *Woodsmith*. We will pay a minimum of $5 for a tip, and $10 or more for a special technique. All material submitted becomes the property of Woodsmith Publishing Co. Upon payment, you give *Woodsmith* the right to use the material in any manner for as long as we wish.

If your idea involves a drawing or photo to explain it, do your best and, if necessary, we'll make a new drawing, or build the project or jig and photograph it. (Any drawings or photos submitted cannot be returned.)

Send your ideas to: *Woodsmith*, Tips & Techniques, 2200 Grand Ave., Des Moines, Iowa 50312.

Hand-Cut Lap Dovetails

CUTTING DOVETAILS THE TRADITIONAL WAY

Lap dovetails require more pure handwork than any other joint in woodworking. Although this joint can be cut with a router and special template (as described on page 6), if you're building a piece of furniture that has only one or two drawers, it's probably faster (and a lot more fun) to cut lap dovetails by hand.

CONSIDERATIONS. In *Woodsmith* No. 19 we talked about the tools needed to cut "through" dovetails by hand. The same tools are needed for lap (half-blind) dovetails. Also, all of the considerations mentioned for laying out a through dovetail (as far as spacing of the pins and tails is concerned) apply to lap dovetails.

However, there is one other consideration that applies only to lap dovetails. You can join the drawer's sides to the front so the sides are flush with the ends of the drawer front (a flush drawer). Or, the drawer front can be lipped (rabbeted) so the sides are set in about ⅜". (This second version is shown in the photo above.)

Although the actual cutting of a lap dovetail is the same in both applications, we're showing the step-by-step for a lipped drawer front.

CUT PIECES TO SIZE. The first step is to cut the drawer front to fit the opening in the cabinet. For a lipped drawer front you want to overlap the opening by ⅜", so the drawer front is cut a total of ¾" larger in both dimensions. Then cut a ⅜"-wide rabbet on all four edges of the drawer front.

LAYING OUT AND CUTTING THE PINS

For a lap dovetail, the pins must be cut on the drawer front first. This works out fine because the pins require the most handwork (and thus the most chance for error).

BASE LINE. The first step is to mark the base line for the pins. To do this, hold one of the side pieces flush with the rabbet on the drawer front, Fig. 1. Then I use a sharp pencil to mark the base line. Although it's not necessary, I usually go back and cut along this line with an X-Acto knife, Fig. 2. (This knifed line helps to position the chisel later.)

MARKING THE PINS. Next I mark the layout of the pins, Fig. 3. First I mark the position of the half-pins on the two outside edges, and follow by marking the position of the full pins, spacing them evenly between the half pins.

MARKING THE ANGLES. If the drawer front is *not* lipped, the cutting angle can be marked with an adjustable bevel using a 1:5 angle. However, on a lipped drawer front, the adjustable bevel won't fit. So I

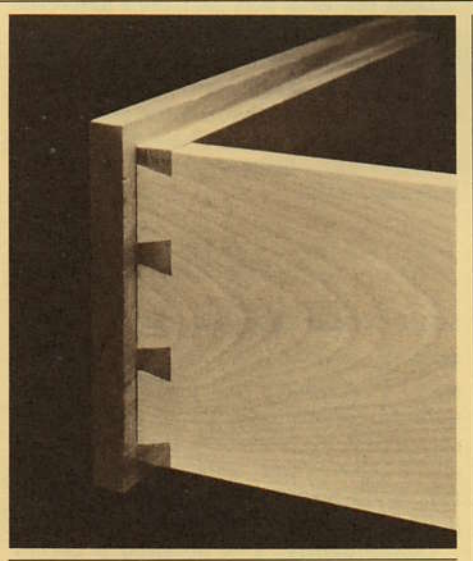

use a template cut from a piece of scrap, Fig. 4.

To make this template, set the scrap on edge on a table saw and make a 1"-deep cut at 11°. Then flip the piece around and make another cut (about 1" away from the first one). Finally, clean out the waste between the two cuts.

THE SAW CUTS. After marking the angled lines, use a small try square to mark vertical lines down to the base line. Then I always mark the waste sections between the pins to avoid confusion.

Now grab the trusty saw (I use a Tysak back saw), and start cutting down the lines, Fig. 5. Be sure to set the saw so you cut on the waste side ("X"-side) of the line. It only takes a few strokes and almost seems like a waste of time because the saw can only make a partial cut. But it does help when the initial chisel-work begins.

CUT THE BASE LINE. After making the saw cuts, the waste sections are chopped out with a *sharp* chisel. The best way to do this is to use a backing fence (as shown in *Woodsmith* No. 19). However, we're showing an alternate method this time.

To define the base line of each waste section, drag the point of the chisel until it falls in the knifed line (made in Step 2). Make a light tap straight down, and then carve out a "V" section in front of the base line, Fig. 6. This small V-section provides a shoulder for the chisel when the chopping begins and helps prevent undercutting on the initial cuts.

CHOP OUT WASTE. Now the real fun begins. I clamp the drawer front to the edge of the workbench, and start chopping away, Fig. 7. At first, the saw cuts will define the chipped out waste. But as you get deeper, the saw cuts simply aren't there anymore and things start to look a little ragged, Fig. 8.

I just keep chopping until I reach the lip of the drawer front (the rabbet). Then I use the chisel like a small hand plane to carve the bottom level with the lip.

Finally, you have to clean up the ragged sides of the pins, Fig. 9. This is sort of a delicate woodcarving operation. Just hold the chisel at an angle and carve in on the sides of the pins (following the pencil lines on the top and end of the board).

The hardest part of this operation is getting the sides of the pins smooth and the corners cleaned out. This can take some time, but it's very pleasant work.

CUTTING THE TAILS

Once the pins are cut and cleaned up, hold the drawer side against the ends of the pins (Fig. 10) and mark the cut lines for the tails with a sharp pencil.

No matter how sharp the pencil is, the pencil line will always be slightly to the inside (on the "good" side) of where you want to cut. So, when cutting the tails, I start the cuts about 1/32" away (on the waste or "X" side), Fig. 11.

CLEAN OUT WASTE. If the pins on the drawer front are narrow and delicate, the corresponding waste sections between the tails will be narrow and delicate. This causes problems. If this waste is narrower than your smallest chisel, you'll have to turn the chisel at an angle to chip out the waste, Fig. 12.

Only the middle waste sections need be chopped out this way. The outside waste sections (for the half-pins) are cut off with a back saw.

THE FIT. If all has gone well, the sides (tails) can be tapped onto the drawer front (pins). I usually do this with great care. If the joint is too tight, there is the danger of splitting the drawer front.

After tapping the joint about halfway together, I knock it apart and check for black rub marks. A little careful paring with a sharp chisel should ease the joint so it can be tapped together for a good tight (but not too tight) fit.

DRAWER BOTTOM. One of the advantages of a lap dovetail is that the grooves for the drawer bottom will not show on either the drawer front or the sides. I cut the groove on the drawer front first, so it's positioned just above the half pin. Then cut the grooves in the drawer sides so they align with the drawer front.

Step-By-Step

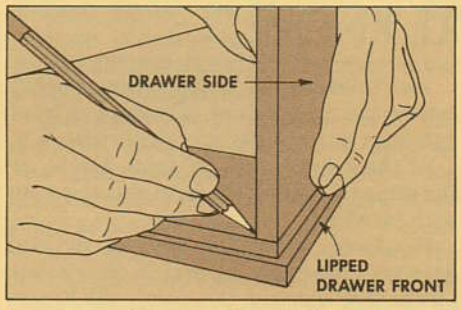

1 *If you're working with a lipped drawer front, cut rabbets to form lip first. Then hold side piece on shoulder of rabbet and mark the base line for pins.*

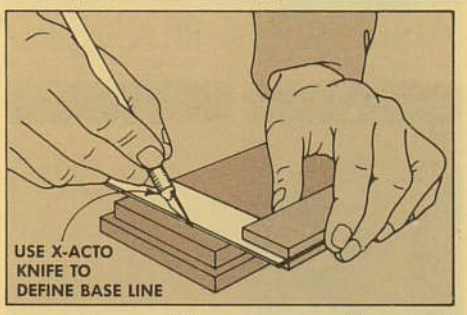

2 *After marking with pencil, use an X-Acto knife to cut a small groove. Later, when chopping out waste, this groove helps position chisel on base line.*

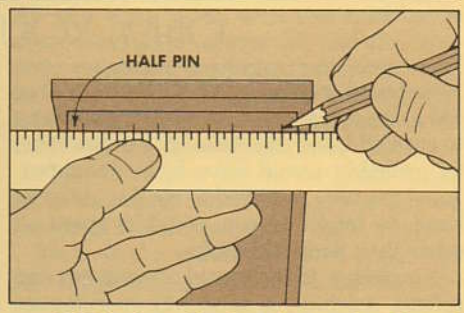

3 *Hold edge of ruler along shoulder of rabbet to mark position of pins. There should be a half-pin on outside edges and full pins evenly spaced between them.*

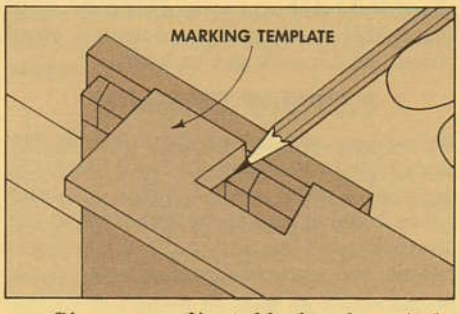

4 *Since an adjustable bevel can't be used to mark angled lines, make a template on a table saw. Set blade to 11° to make angled cuts, then cleanout waste.*

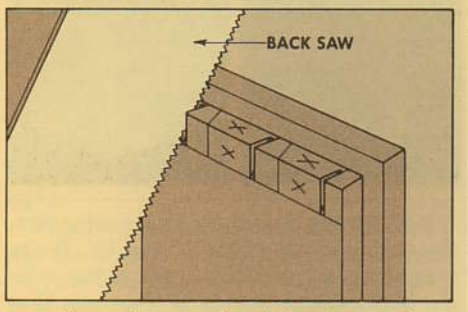

5 *Place drawer front in vise and use back saw to saw down marked lines, staying on "X" (waste) side of lines. It only takes a few strokes to complete these cuts.*

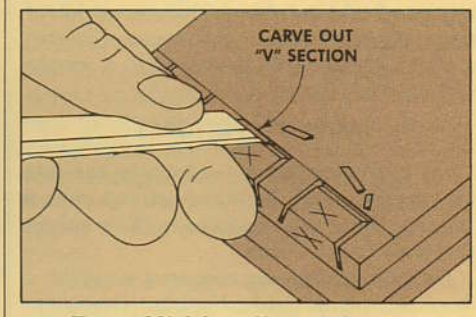

6 *To establish base line, slide chisel into knifed line and tap straight down with mallet. Then carefully carve out a small "V" section in front of base line.*

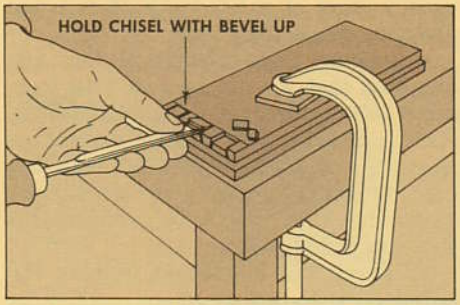

7 *To chop out waste, position chisel in "V" and chop straight down. Then hold chisel on end grain (with bevel up) and chip out waste with a light tap.*

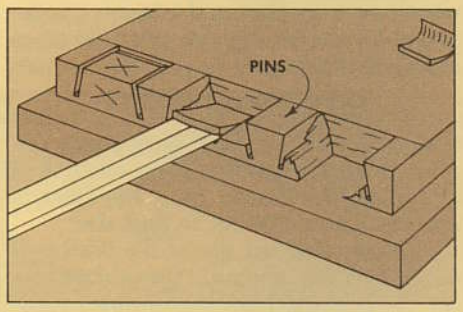

8 *Continue to chop out waste between pins. When you reach the lip of the drawer front, use chisel as a small plane to carve out recess even with lip.*

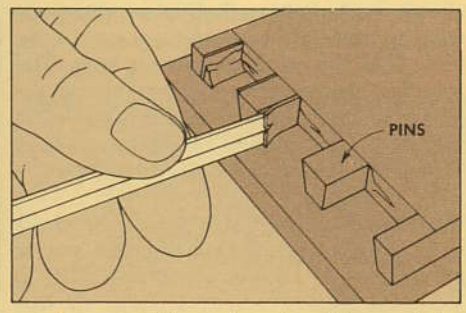

9 *Large sections of waste will remain in the corners. To clean this out, hold the chisel at an angle to follow the marked lines, and smooth the sides of the pins.*

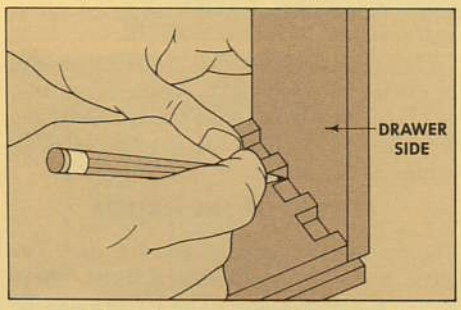

10 *After pins are completed, hold side piece against ends of pins and use sharp pencil to mark the angled lines as well as the base line for the tails.*

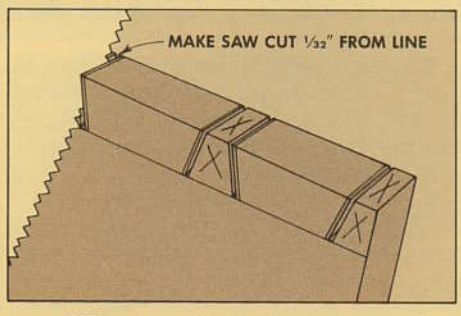

11 *When sawing out waste, position saw about 1/32" from the marked line. Hold saw at a steep angle until base line is reached, then level it out to finish cut.*

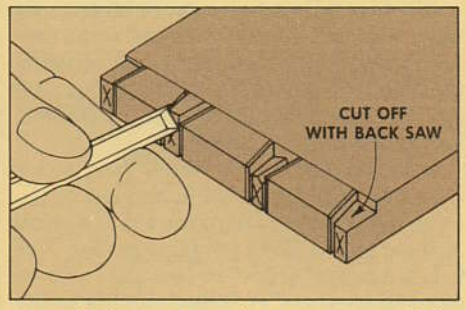

12 *If the waste sections are too small for your smallest chisel, hold chisel at angle. Chip out waste between tails, and then saw off outside two waste sections.*

Machine-Cut Dovetails

ONLY YOU AND YOUR ROUTER WILL KNOW

If someone walked up to a cabinet-maker 100 years ago and told him there was a way to cut half-blind dovetails *with a machine*, he probably would have been delighted. All of the time required to cut dovetails by hand, he might reason, could be spent on other (less arduous) tasks.

Nowadays, in this world of machines and robots, we have a tendency to romance that old-time hand-work and disdain modern machine work. But romance aside, machine-cut (routed) dovetails do have their place, even in a home shop. If you want to build a cabinet that has a lot of drawers, one of the best (most efficient) ways to get the job done is with a router and dovetail fixture.

DOVETAIL FIXTURES

Once you've resigned yourself to the fact that machine-cut dovetails are not such a terrible thing, all you have to do is collect the tools to cut them.

Only four things are required: a router, a dovetail bit, a guide bushing (template guide), and a dovetail fixture. This last item (the dovetail fixture) is the key to the whole process.

DOVETAIL FIXTURES. The fixture that allows you to cut lap (half-blind) dovetails with a router is just a comb-shaped template that fits on an aluminum base. The base has clamping bars to hold the workpieces in place while the router is guided in and out of the "fingers" on the template to cut evenly spaced dovetails on a drawer's front and sides.

Although these fixtures cut dovetails quite efficiently, they have two major drawbacks: 1) they're expensive ($60 to $80), and 2) they take time to set up. But when you have a lot of drawers to build, a dovetail fixture is probably worth the money because of the long-run savings in time.

All dovetail fixtures work about the same way, but in order to avoid some confusion (and repetition), we're only showing the Sears 12" model No. 25710 in this article. (For an evaluation of three other dovetail fixtures, see page 10.)

GUIDE BUSHING. The router (and hence the router bit) is guided in and out of the fingers on the comb with the aid of a guide bushing (also called a template guide). This is just a metal "collar" or bushing (with an outer diameter of 7/16") that mounts to the plastic base on the bottom of the router. The Sears guide bushing, for example, screws to the plastic base with three machine screws.

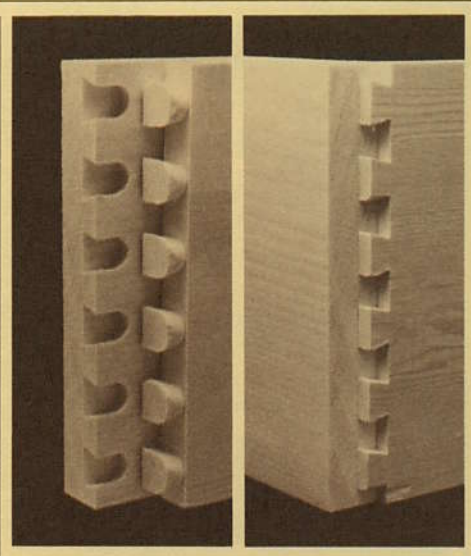

ROUTER BIT. As for dovetail router bits, they come in two sizes: 1/4" and 1/2". We're concentrating on 1/2" dovetails in this article because the standard template that comes with dovetail fixtures is made for a 1/2" dovetail bit.

Since you've already spent a lot of money on the fixture, you might as well empty your pocket and get a carbide-tipped dovetail bit (they're worth the extra money in this case).

LAYING OUT THE CUTS

Once you have the tools, there's only one other thing you need — some wood. And this wood (the drawer front and sides in this case) should be cut to final size.

Since the finished size of the drawer is dictated by the opening in the cabinet, you don't have much choice here — just cut the pieces to fit the opening.

Also, since the layout for machine-cut dovetails is determined by the dovetail fixture, you're basically stuck with a static pattern of 1/2" dovetails that repeats every 7/8", see Fig. 1.

However, there is one consideration to keep in mind. Because the dovetail layout has a set size, the dimensions of the cabinet opening should be planned ahead of time to easily accommodate this layout.

It's nice (but not absolutely necessary) if the drawer front is sized for a pattern that puts a half-pin on the top and bottom edge (just like the layout for a hand-cut dovetail).

THE MATERIAL. As for the wood itself, one advantage of machine-cut dovetails is that they can be successively cut in either solid wood or plywood.

The thickness of these pieces doesn't matter too much either. The drawer front and sides can be different thicknesses, (i.e. a 3/4"-thick front with 1/2"-thick sides), or the same thickness (the front and sides are both 3/4" thick).

However, if you're making several drawers, it's very helpful if all *similar* pieces are exactly the same thickness. That is, all drawer fronts exactly the same, and all sides exactly the same.

Once you know the final dimensions for the drawer fronts and sides, you can go ahead and cut them to size. However, all of the initial work will be done on scrap pieces, which we'll get to later.

SETTING UP THE ROUTER

Before you can start cutting dovetails, the router has to be set up. In order to use the dovetail fixture, a 7/16" outer-diameter guide bushing has to be mounted to the plastic base of the router. Then, the dovetail bit can be mounted and adjusted to the proper depth of cut.

The Sears instruction sheet (that comes with the dovetail fixture) says to adjust this depth of cut to 17/32". But 1/2" (exactly 1/2") seems to work better for me, so I usually start at a 1/2" depth of cut, and fine-tune this setting later.

ALIGNMENT. Once the bit is in place, you may find that it's not aligned with (centered on) the throat of the guide bushing. (This is a problem with Sears routers because the mounting holes for both the bushing and the plastic base are slightly larger than they need to be, which means they can slide off-center.)

To check the alignment, unplug the power cord, and rotate the dovetail bit by hand to make sure it doesn't scrape against the bushing. As you rotate the bit, also check the distance between the inside of the bushing and the edge of the bit for the entire rotation to make sure the bit is centered.

If there are problems, adjustments can be made by loosening the mounting screws on the plastic base or on the bushing, and moving one or both to get the bushing centered on the bit.

SETTING UP THE FIXTURE

The router is ready to go, but now you have to set up the dovetail fixture. There are two options here. The fixture can be set up for 1) routing dovetails for a flush drawer (the sides are flush with the edges of the drawer front), or 2) routing dovetails on a rabbeted drawer front (the sides are

set in ⅜" to allow a lip on the drawer front).

The only difference between these operations is the position of the small guide pins located on the top and the front edge of the dovetail fixture, see Fig. 4. These pins position the drawer front and side so they're offset the proper amount for either a flush or rabbeted drawer.

ADJUSTING THE TEMPLATE. Next, the template "comb" is adjusted to position. This is partly a matter of measurement and partly a matter of experimentation. What I do is adjust the template comb so the seat of each channel (finger) is ½" from the front edge of the base, see Fig. 3. (On the Sears fixture this is done by turning an adjusting nut in or out to reposition the template, see Fig. 6)

At this point, it would be nice if the fixture were ready to rout perfect dovetail joints. But it's not. In fact, you have to do a lot of fiddling around before everything is aligned properly.

ALIGNMENT: TRIAL CUTS

Getting the dovetail fixture aligned requires making a trial cut, making an adjustment, making another trial cut, making another adjustment, etc., etc.

Naturally, all of this should be done on scrap wood. The length of the scrap doesn't matter too much as long as it fits in the fixture. However, the width and especially the thickness should be exactly the same as the good pieces.

I mount the scrap pieces in the fixture with a three-step procedure (refer to Fig. 2). First, the scrap piece for the drawer side is temporarily mounted (under the holding bar on the *front* of the fixture), so it can be used to align the drawer front. I usually slide this piece against the left guide pin for the trial cut.

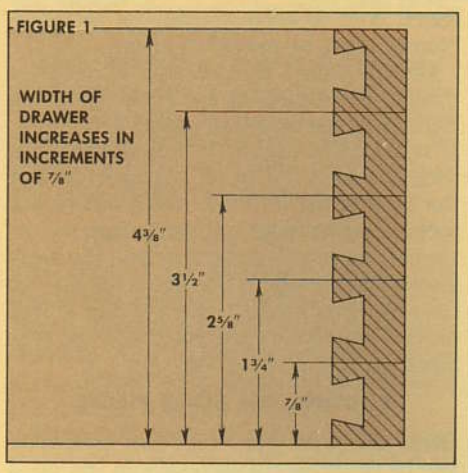

Next, mount the scrap piece for the drawer front under the holding bar on *top* of the fixture (also aligning it against the left guide pin). Now push the drawer front tight up against the side piece, and clamp it tight.

Finally, loosen the front bar (that's holding the drawer side in place), and reposition the side piece so the top edge is level with the top face of the drawer front, see Fig. 4.

When both pieces are in place, mount the template comb in the fixture. (Note: the ⅜" spacer that comes with the Sears fixture should be *behind* the arm of the comb, see Fig. 6). Hold the comb down (flat) on the drawer front and tighten the knobs to hold it in place. At last, you're ready to cut a trial dovetail.

THE TRIAL CUTS

All you want to do with this trial cut is determine if the router bit and the template comb are positioned correctly. And for now, let's assume you're working with solid wood, and the drawer front is ¾" thick and the drawer side is ½" thick.

Place the router flat on the comb so the bit is near (but not touching) the far left corner of the drawer side.

Turn on the router and push it (gently) into the first finger. Continue to follow the fingers in and out, moving from left to right. After you make the last cut on the right side, follow the path in reverse to clean off any spots you may have missed with the first pass.

Before removing the pieces from the fixture, check them over to make sure you've routed each dovetail evenly. There should be about a 1/32" lip of wood around each of the fingers. The one problem I usually run into here is that I didn't go deep enough into one of the fingers. If there's a problem like this, return the router to the template and rout out any excess.

When the template comb is removed, the routed pieces should look something like what's shown in Figure 5.

TEST FOR FIT. Once everything looks okay in the fixture, remove the pieces and tap them together. If you're very lucky, the pieces will go together perfectly. If you're like me, you'll have to do some adjusting to get a good fit.

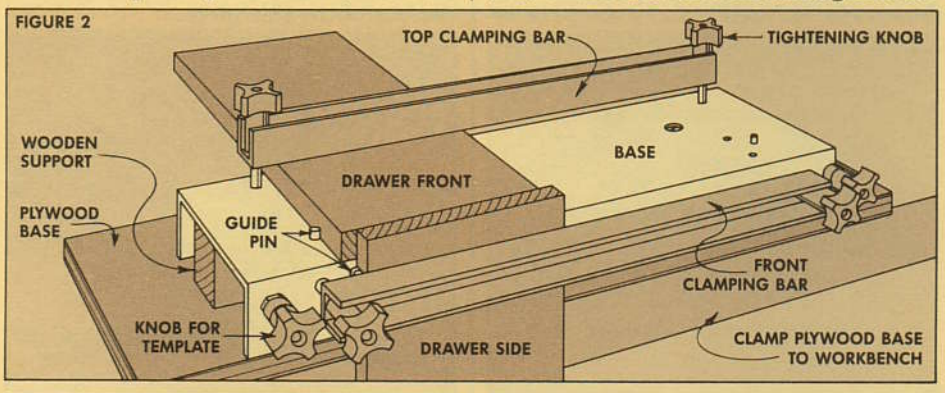

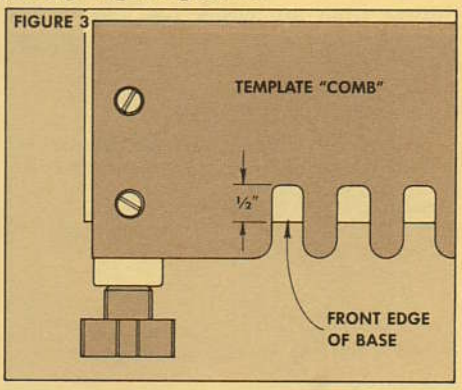

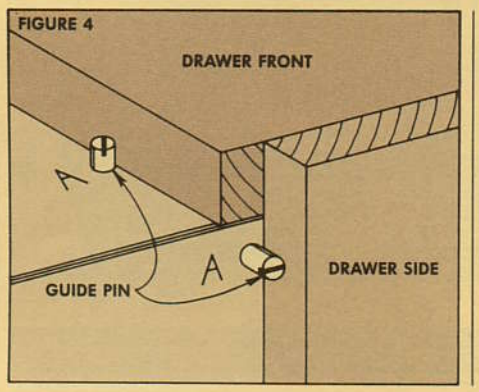

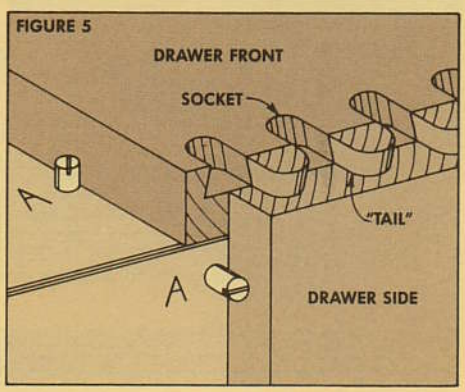

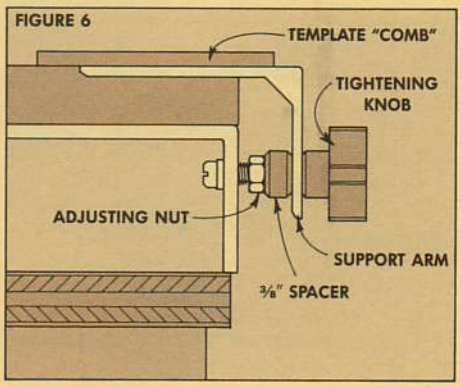

MAKING ADJUSTMENTS

After the trial cut is made, you'll probably be faced with some bad news and some worse news. The bad news is that the joint won't fit just right. And the worse news is that trying to figure out what's wrong can be very confusing.

There can be two basic problems with the fit of a routed dovetail joint. 1) The tails (the part of the joint on the side piece) fit too tight or too loose in the sockets in the drawer front; or 2) the side piece goes into the front piece too far or not far enough.

And now for the good news. There are only two basic adjustments to solve these problems.

TOO LOOSE. If the joint is too loose (the pieces kind of wag around when they're put together), the depth of cut is too shallow. Increase the depth of cut about 1/32" (so the depth is 17/32"), and test again.

TOO TIGHT. If the trial cut is too tight (so tight that the joint can't be tapped together), decrease the depth of cut about 1/32" (so the depth is 15/32"), and test the cut again.

If you have enough scrap wood (and patience), refine the depth of cut until you're making adjustments of 1/64". (This may seem like nit-picking, but 1/64" makes a lot of difference in this case.)

After making these adjustments, you should be able to tap the joint together with very light taps.

DEPTH ADJUSTMENT. Once the joint goes together, the "tails" on the side piece may fit into the sockets on the front piece too far or not far enough, see Fig. 7. The cause of this problem is that the sockets in the drawer front are either too long or too short. And to correct this, the template "comb" must be moved in or out.

On the Sears fixture this is done by turning the adjusting nut (located behind the arm of the template comb), see Fig. 6. If this nut is turned in (clockwise), the template comb will be moved back (toward the back of the fixture), which means the sockets will be longer, which in turn means the side piece will go farther into the front piece. Conversely, if this nut is moved out (counter-clockwise), the template will move forward (toward you), and the side piece will not go in as far.

ROUTING THE GOOD PIECES

Once the joint goes together properly, you're ready to cut dovetails in the good pieces. These pieces should be cut to finish size. Then it's best to mark the mating corners on each piece.

I just mark an "L" on the inside face of the left corner of both the drawer front and the drawer side; and an "R" on the right corner, see Fig. 8. I also mark an arrow to indicate which edge will be the bottom (the edge where the groove for the drawer bottom will be cut.)

Then these pieces are mounted in the fixture inside out. That is, the inside face of both pieces will be facing out (facing you). Then the pieces for the left corner of the drawer (marked with an "L") are mounted on the left side of the fixture; and the pieces for the right corner are mounted on the right side of the fixture. Also, the bottom edge of each piece should be against its respective guide pin, see Fig. 2.

Now it's just a matter of cutting as many drawers as you need — there should be no need for any adjustments because everything was set with the trial cuts.

After the dovetail joints are cut, you can cut the groove for the bottom. This groove should be centered on the bottom socket in the drawer front (see Fig. 9), so it doesn't show when the joint is assembled.

SPECIAL SITUATIONS

All of what's been discussed so far is the typical approach to building a drawer. That is: solid wood drawers with a 3/4"-thick drawer front and 1/2"-thick sides. However, there are some situations that change the way you go about things.

WORKING WITH PLYWOOD. As mentioned earlier in this article, machine-cut dovetails can be successfully cut in plywood. And it's a pretty good joint . . . if you accept the fact that the "tails" on the side piece are prone to a lot of splintering and chip-out.

But the biggest problem with plywood is excessive splintering of the face veneer. Since the face veneer is so thin and fragile, it tends to splinter and chip right along the shoulder of the side piece.

THICK DRAWER SIDES. The same problem occurs in solid wood when the drawer sides are thicker than 1/2". In this case a portion of the drawer side sticks out beyond the ends of the template "fingers" and the rotation of the router bit chips off this excess material instead of making a clean cut.

THE SOLUTION. The solution in both cases is the same. Before pushing the router into the fingers of the template, first make a light pass straight across on the face of the side piece.

FIGURE 7

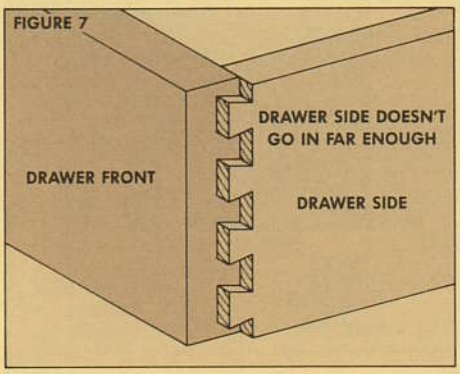

FIGURE 8

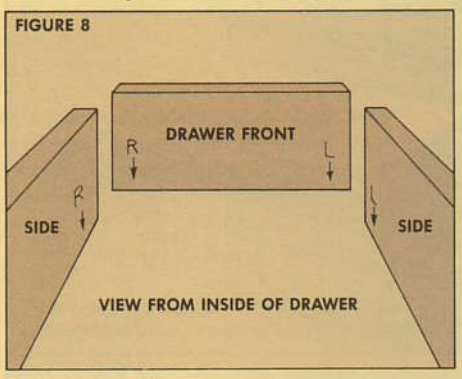

FIGURE 9

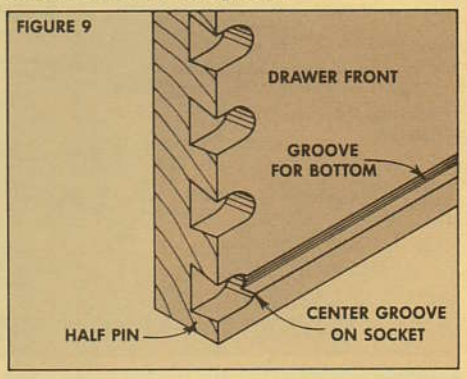

FIGURE 10

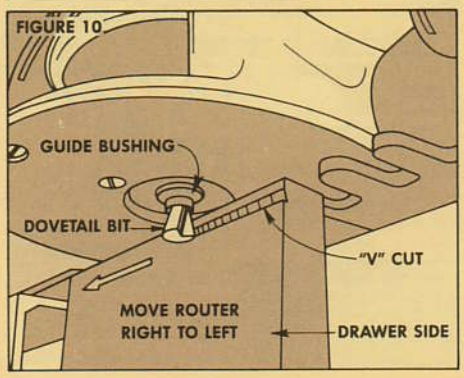

FIGURE 11

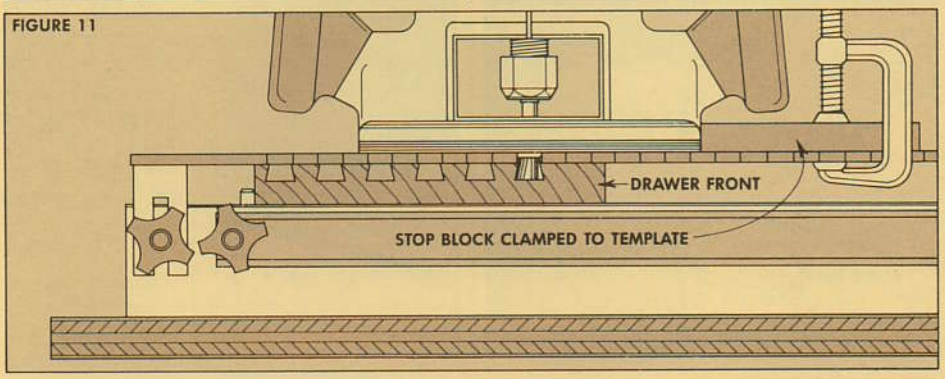

Normally, the router is moved from left to right. But in this case it's best to make the first pass in the reverse direction — start at the right and move to the left, see Fig. 10.

As this cut is being made, the rotation of the bit actually pushes the router away from the workpiece, making a very shallow cut — exactly what you want. The shape of the router bit forms a small "V" groove which establishes a clean shoulder line.

Since you can't see what's going on (from a standing position), I kneel down to see under the router's base. (Always wear goggles, or better yet, a full-size face mask when doing this — the sawdust will be hurling toward your face.)

After this initial light pass, I usually make another pass (again from right to left) to remove most of the waste on the side piece. Then proceed as before, moving the router in and out of the fingers from left to right.

SHALLOW DRAWER SIDES

One of the options you have with building drawers is to trim the sides so they're an inch or so below the level of the drawer front. (This was done on the drawers for the modular storage units shown on page 12.) The best approach in this case is to rout the drawer front and side separately.

First, mount one of the drawer sides, and a piece of scrap wood where the drawer front would normally be. (This scrap prevents excessive chipping on the "back" side of the cut.) Go ahead and cut all the side pieces.

Note: Be sure to mount all the "left" pieces on the left side of the fixture, and all the "right" pieces on the right side of the fixture.

Then mount the drawer fronts. However, to stop the router from going into the "unused" portion of the front, clamp a stop block to the template comb, see Fig. 11. Then rout the same number of sockets as there are "tails" in the side piece.

RABBETED DRAWER FRONT

The method for cutting dovetails in a lipped (rabbeted) drawer front can get confusing. We have four dovetail fixtures in the shop. And the instructions for each one give a different explanation of how to make this joint in a lipped drawer.

However, they all agree on one thing: you start by cutting a ⅜"-wide rabbet on the four edges of the drawer front. The problem with this method is that the rabbet creates a gap right behind the drawer side, see Fig. 12.

Once the router bit "breaks through" the side piece, there's a strong likelihood of splintering on the "back" face of the drawer side. (Since the drawer side is mounted "inside out" the "back" face is really the face that will show on the outside of the drawer.)

ANOTHER METHOD. To prevent this splintering, we go about this whole process backwards. Briefly . . . the dovetails are cut first, then the rabbets are cut. Since the drawer front is *not* rabbeted with this method, it serves as a backing piece for the drawer side, and this solves a lot of the splintering problems.

The first step is to cut the drawer front to size. Measure the opening in the cabinet and add ¾" to both dimensions. (This allows for a ⅜" lip on all four edges of the drawer front.) Then subtract 1/16" to allow for clearance.

The drawer sides are cut a little larger than necessary. For the initial size, measure the height of the cabinet opening, add about ¼", and cut the drawer sides to this width. This extra width will be on the top edge of the drawer side, and can be trimmed off later.

Using the Sears fixture again, mount the drawer front and side the same way described previously (for a flush drawer), except the guide pin on top of the fixture is moved to the "B" hole, see Fig. 13. (The arm of the template comb should be in *front* of the ⅜" spacer.)

Now make the first cuts exactly the same way as on a flush drawer. After these first cuts are made, the side piece can be removed (it's finished), but do *not* move the front piece.

The sockets on the drawer front need to be cut ⅜" longer (allow for the rabbet). Loosen the knobs holding the arms of the template comb in place, and move the ⅜" spacers in *front* of the comb arms, see Fig. 14. What all of this does, in effect, is move the comb back ⅜" so the sockets in the drawer front can be routed an extra ⅜" longer, Fig. 15.

After the drawer front is complete, tap the two pieces together (Fig. 15), and mark lines for the rabbet cuts on the drawer front. Go ahead and cut the rabbets, and then trim the top edge of the drawer sides to fit flush with the shoulders of the rabbets. You should wind up with a lipped drawer that looks something like the one shown in Fig. 17.

FIGURE 12

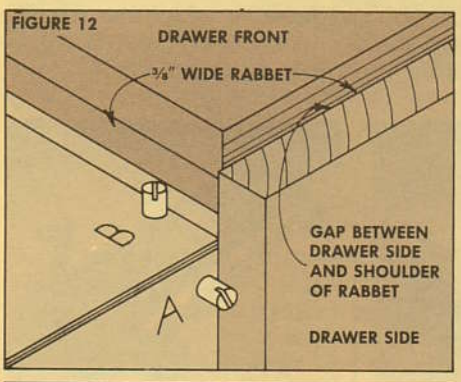

FIGURE 13

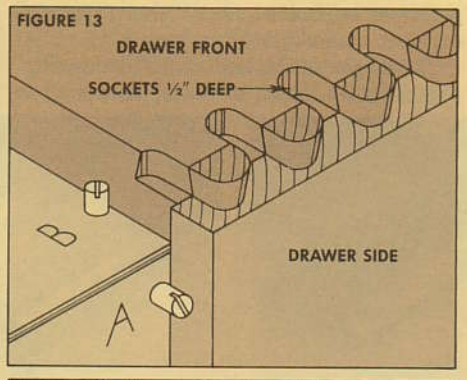

FIGURE 14

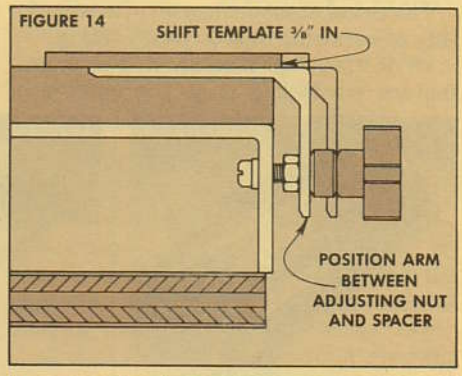

FIGURE 15

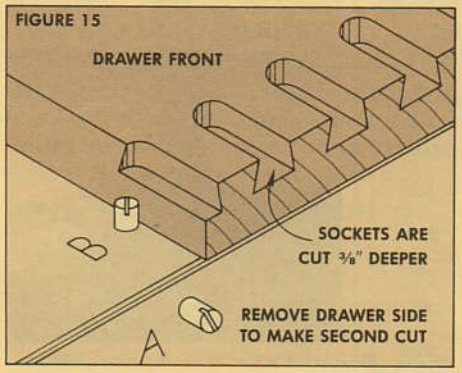

FIGURE 16

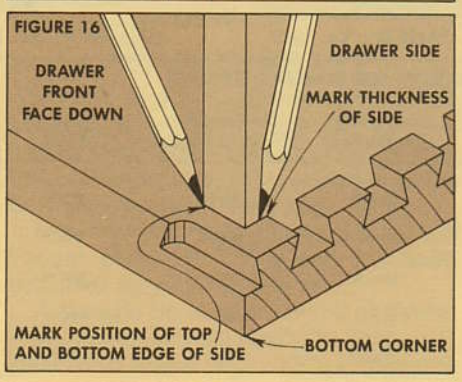

FIGURE 17

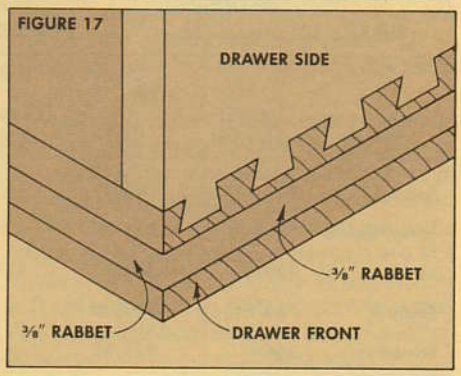

Tools of the Trade

DOVETAIL FIXTURES: THE CHOICES, AND OUR OPINIONS

When we decided to do the article on cutting lap dovetails with a router and dovetail fixture (page 6), we thought it would be a good opportunity to get several fixtures in the shop to test them out.

The four dovetail fixtures we bought are very similar. Each one cuts lap dovetails with a router, and each can be used with any brand of router (provided it has a 7/16" guide bushing).

But after we had a chance to use each of them for a while, we began to develop some likes and dislikes. We quickly learned that three things became the deciding factors for our opinions.

TEMPLATE ADJUSTMENT. First, we looked at the method of adjusting the template for the "length" of cut. This adjustment is made if the drawer side fits into the drawer front too far or not far enough.

Both the Sears and Boshe fixtures have a similar approach: There's an adjusting nut on the fixture's base that can be turned in or out to alter the position of the template (and thus how far the cut goes into the drawer front). This nut is easy to get to and adjustments can be made quickly. We gave both fixtures a "good" rating.

The Porter Cable fixture (rated "fair") has a different system that uses a set screw on the back of the template comb. This approach is somewhat awkward, and requires more fiddling around.

The Sears 8" model has no provision for this adjustment; thus a "poor" rating.

SWITCHING THE TEMPLATE. The second feature we looked at is the method of switching the template to cut either a flush or rabbeted drawer front.

The standard template on three of the fixtures (the Sears 12", the Sears 8", and Porter Cable) can be easily switched from one function to the other. However, all three go about it in different ways.

The Sears 12" model uses a 3/8" spacer to reposition the template for flush or rabbeted drawer fronts. On the Porter Cable model, the template is mounted to a sliding arm that moves in and out by loosening holding screws on the back of the arm.

There is little difference in ease of adjustment between these two systems, so we judged them equally "good."

The Sears 8" model uses a metal filler strip on the template to stop the router for a flush drawer. This works fair, and was rated "fair."

As for the Boshe model, the standard template will only cut a flush drawer front. You have to buy a separate template to cut a rabbeted drawer front.

KNOBS. After using each fixture for a while, we found that an insignificant thing like the knobs made a big difference on the wear and tear on your fingers as you change workpieces.

The Porter Cable and Sears 8" models use wing nuts that are just barely adequate to their purpose; hence the "poor" rating. The Sears 12" model has small plastic knobs with deceptively sharp (painful) corners; also a "poor" rating.

The Boshe model has large "three-wing" plastic knobs which we found very easy to work with (and easy on the fingers); a "good" rating.

CHART OF COMPARISON. The chart below compares the cost of each fixture, and gives our ratings of the features. The last column represents our opinion of the instructions that come with the fixture.

CONCLUSIONS. Of the dovetail fixtures we tested, our first choice would probably be the Sears 12" model. If Sears would just change those pain-producing knobs, it would be a very good fixture in all respects.

The Boshe fixture is also quite good — except it's expensive to begin with, and then you have to buy two different templates for flush and rabbeted drawers.

The Porter Cable fixture rated in that middle ground. It works, but the Sears and Boshe have better features.

As for the Sears 8" model, it's the cheapest of the bunch, and may be useful if you plan to use it only occasionally.

DRILL FIXTURE. One other fixture we looked at (from the Princeton Tool catalog) is designed for use with an electric drill.

There are two major drawbacks with this fixture: 1) it's difficult to duplicate cuts on several pieces because the set-up depends on pencil lines; and 2) you're supposed to use a 3/8" drill rated at 3000 RPM (a heavy-duty commercial drill).

We tried using a Makita drill (1800 RPM), and have to admit the fixture worked . . . very slowly. But the drill alone costs $60. All things considered, I would go with one of the router fixtures.

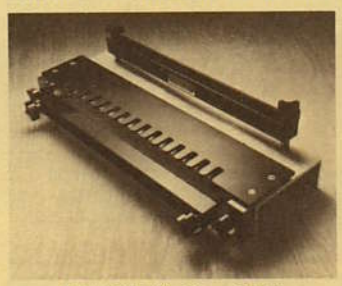

SEARS 12", No. 25710

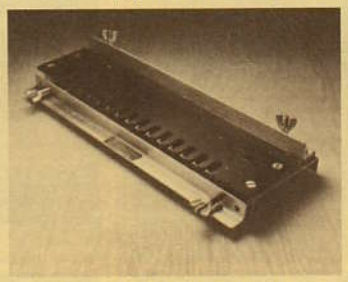

PORTER CABLE, No. 5008

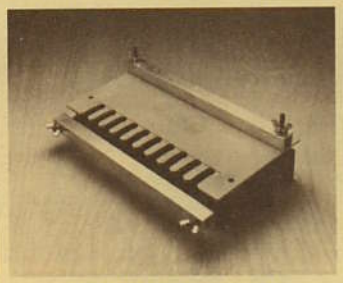

SEARS 8", No. 25760

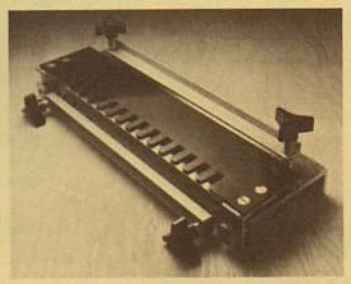

BOSHE (STANLEY), No. 82913

CHART OF COMPARISON FOR DOVETAIL FIXTURES

Brand	Model Number	Cost	Usable Width	Template Adjustment	Switch From Flush to Lipped	Knob	Instr.
Sears 12"	315.25710	$59.99	12"	good	good	poor	fair
Porter Cable	5008	$67.85	12"	fair	good	poor	good
Boshe	82913	$82.30	12"	good	no	good	poor
Sears 8"	720.25760	$29.99	8"	poor	fair	poor	fair
Princeton	2564	$39.95	5"	fair	fair	N/A	fair

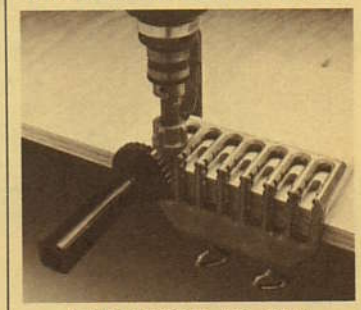

PRINCETON, No. 2564

Shop Notes

SOME TIPS FROM OUR SHOP

We decided to use plywood for both the major projects in this issue. And as it turned out, the decision to use plywood was a mixed blessing.

Although there are a lot of advantages to using plywood — no gluing of random sized pieces of lumber, no planing is required, and the amount of time required for a project is usually reduced — there are also several disadvantages. Plywood has a nasty habit of splintering, it comes in very awkward sized sheets, and the exposed edges always present a problem.

While we were building the cabinet/hutch and the modular storage system for this issue, we came up with few "tricks" to help solve some of these problems.

PANEL CUTTING JIG

In *Woodsmith* No. 18, we showed the panel cutting jig we use when we need to cut large workpieces on our table saw. What prompted us to change its design was a nagging problem that kept popping up — the runner kept binding in the miter gauge groove. This caused the jig to "jitter" as the cut was made, causing a "burned" edge.

We changed the design on a new panel

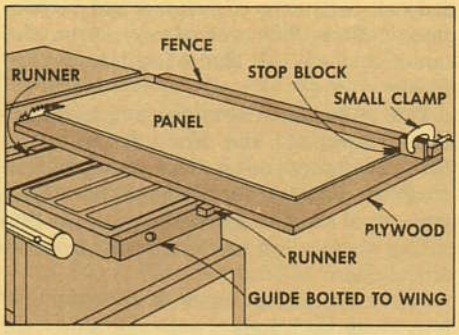

cutting jig by adding a second runner that rides along the outside edge of the table saw's wing. This second runner helps keep the jig lined up with the blade and it also keeps the first runner from binding in the miter gauge groove.

On some table saw models, there are bolts on the outside edge of the wings. To keep the heads of these bolts from catching the new runner, we bolted a piece of wood to the outside edge of the wing, counterboring to recess the heads of the bolts.

THE MASKING TAPE SOLUTION

One of the most annoying problems with plywood is that it splinters along the edge as it's being cut. The most common reaction to this problem is to blame the saw blade. Unfortunately, when an open-grained wood (like oak) is used for the face veneer of plywood, it will splinter (to some extent) no matter what saw blade is used.

The trick we use to eliminate this problem is simple: we apply masking tape over the layout lines on the plywood. This gives the face veneer enough support to keep it from being torn out by the saw blade.

Then we cut the plywood in the normal manner and remove the tape slowly, pulling it toward the edge. This method eliminates splintering every time.

ROSAN INSERTS

A rosan insert (also called a threaded insert) is a handy little piece of hardware . . . and a pain in the neck. These little gizmos are designed with threads on both the inside and outside — so you can use the outside threads to screw it into a hole, and the inside threads to mount a bolt.

The problem is in trying to screw them

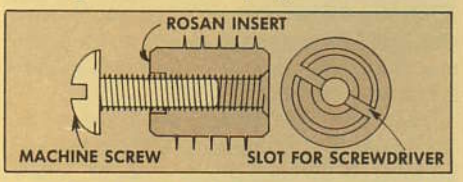

into the hole. They have screwdriver slots on the "shank," but because the rosan insert is hollow these slots are only on the very outside edges. This means there's an extremely small area of contact between the screwdriver and the slots.

Then to add to the problem, rosan inserts are made out of brass, which is relatively soft. This all adds up to a real chance of stripping out the slots before the inserts are completely seated.

The procedure I use to mount rosan inserts is two-fold. First I coat the threads with bee's wax (or soap) to reduce the fricton between the threads and the wood. Then instead of using the slot in the body of the insert, I screw a machine bolt all the way into the insert, and use it to screw the insert into the wood.

IRON-ON VENEER TAPE

Another major problem with using plywood is trying to hide the exposed edges. One of the easiest ways is with iron-on veneer tape. (This was used on the modular storage system, page 12).

Iron-on veneer tape is just a thin piece of veneer about 13/16" wide and has heat-activated adhesive on one side.

Although there are several different types of iron-on tape available, Edgemate Real Wood edging (sold by *The Woodworkers' Store*) adheres better, and is easier to use, than any other brand we've tried.

APPLICATION. When applying veneer tape, the first step is to cut a strip about ¼" longer than is needed. (I use a pair of old scissors I keep around the shop, and they seem to work just fine.)

To apply the veneer tape, heat up an iron to the "cotton" setting. Lay the veneer tape on the plywood with one edge of the tape flush with one face of the plywood. Then slowly move the iron down the length of the veneer tape to "melt" the adhesive.

Immediately after passing the iron over the tape, I press it in place with a small pine block. This block also absorbs heat to "set" the adhesive.

MISTAKES. One of the nicest things about iron-on veneer tape is that it's easy to fix mistakes. All you have to do is to go over it again with the iron. This softens the adhesive so that the veneer can be lifted and repositioned correctly.

TRIMMING. After the adhesive has cooled (about a minute or so), the veneer overhanging one edge of the plywood can be trimmed flush with a *sharp* chisel. Hold the chisel so the flat side is against the face of the plywood and slowly push it into the

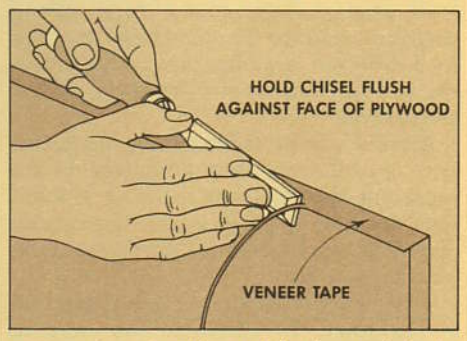

veneer tape (cutting with the grain). As long as the chisel is held flush against the plywood, it will trim the edge without gouging the plywood or the veneer tape.

SQUARE ENDS. There are times when the veneer tape needs to be cut square on one end to butt against another piece. To do this, I use a little trick that requires nothing more than a 1" chisel.

Stand the chisel on the veneer tape so you can look straight into the flat side of the chisel. You should see a reflection of the two outside edges of the veneer tape.

The trick is to twist the chisel until the edges of the tape in the reflection are in a straight line with the edges of the veneer in front of the chisel. When both edges look like one continuous straight line, the chisel is positioned to cut a square end.

Modular Storage System

MIX AND MATCH A MILLION WAYS

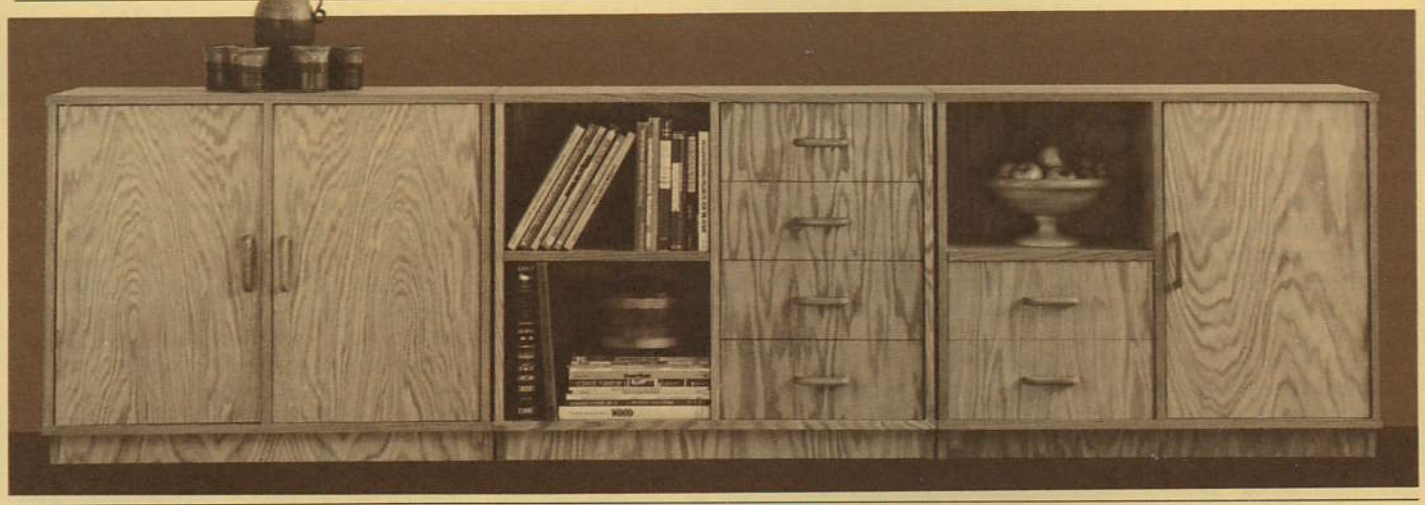

Versatile is the best word to describe this modular storage system. Not only can the individual units be arranged in any order, but the components (the doors, drawers and shelves) are completely interchangeable between units.

Besides just being versatile, the design allows each unit to be made out of a single sheet of ¾" plywood, a 4'x4' sheet of ¼" plywood, and some specialty hardware.

On page 15 we've shown three cutting diagrams utilizing the same basic box, but with different combinations of the interchangeable components—drawers, doors, and shelves.

Although these three cutting diagrams are very efficient, they definitely do not represent the only combinations. If more than one unit is being made, the cutting diagrams can be adapted to fit the combination you want.

There's one other thing I should mention at the start. To eliminate the nagging problem of plywood splintering, we used the router table (shown in *Woodsmith* No. 20) to cut the "joints" for these units. So, you might consider building the router table to help with this project.

THE BASIC BOX

The basic box consists of six pieces: the sides (A), the top and bottom (B), and the center divider (C). These six pieces are cut from approximately 2/3's of a 4x8 sheet of ¾" plywood.

So, the first step is to cut the plywood into three pieces: 25¼" long, 35" long, and 35⅝" long as shown in the Cutting Diagrams. These measurements are rough dimensions, providing about ½" leeway on each piece.

After the three pieces are cut, set aside the 35⅝" piece (for the components) until the basic box is built. The remaining two pieces are rough cut into six panels 15⅞"-wide. Then two of these panels (one that's 25¼" long for the center divider, and one that's 35" long for the shelves) are trimmed to final width: 15¼" wide.

The other four panels are trimmed to 15½" wide for the sides (A) and the top and bottom (B). To keep things straight, follow the cutting diagram and label all of the pieces right after they're cut.

Now all six pieces are cut to their finished lengths using a panel jig on the table saw (see Shop Notes, page 11). Cut the top and bottom sections 34½" long, and the center divider and both sides 24⅞" long.

CENTER DIVIDER. Since the interchangeability of the drawers and doors relies on the inside measurements of each side of the box being *exactly* the same, the center divider must be perfectly centered on the top and bottom pieces.

The way I made sure that the dado for the center divider was exactly centered was to cut it with a router and a simple jig, see Fig. 2. This fence is just a piece of plywood cut to length so it guides the base of the router down the center of the workpiece. It works great . . . if it's exactly centered on the workpiece.

To make sure it is centered, I clamped the fence on one end of the workpiece and made a cut that just barely entered the back edge of the plywood. Then I moved the fence to the opposite end of the workpiece and checked to see if the location of the bit was exactly on the first cut. The fence may have to be adjusted until the dado is dead center on the workpiece.

THE CORNER JOINT. The joint used to connect the sides with the top and bottom is a rabbeted tongue/dado, see Detail A in Fig. 1.

To make this joint, rout the dado on the top and bottom pieces first. Using a ⅜" bit, I set the fence on the router table ½" from the closest edge of the bit and the depth of the cut at ⅜". (This ½" measurement allows for a ⅛" over-hang on the ends of the top and bottom pieces.)

After the router table is set up, cut the dado on both ends of the top and bottom pieces. Note: This cut should be on the same side as the dado for the center divider.

THE TONGUES. To cut the tongue on the side pieces, set the fence ⅜" from the *farthest* edge of the bit. This set-up will cut a rabbet, which in turn leaves the tongue you want. I had to make several trial cuts (using scrap) until the tongue fit properly in the dado.

When the router table is adjusted, cut tongues on both ends of each side piece (A). (Note: the *rabbet* is cut on the "outside" of the side piece.

Now, to cut the tongue on the center divider, you have to adjust the depth of cut of the bit (but don't move the fence). This tongue is formed by cutting a double rabbet so the tongue is centered on the thickness of the plywood, see Detail B in Fig. 1. (You shouldn't move the fence for this cut because the shoulders of the rabbets on the center divider must line up with the shoulders on the side pieces.)

RABBETS FOR BACK. At this point, the only thing left to do is cut the rabbets for the ¼" plywood back. Once again I used a ⅜" straight bit on the router table.

Figure 3 shows how the rabbet for the plywood back is stopped at the dadoes at both ends of the top and bottom pieces.

This double stopped rabbet is really fairly easy to cut on the router table by marking "start" and "stop" lines on the fence.

To make these cuts, slide the workpiece sideways into the bit, using the "start" line as a reference point to start the cut. Then cut the rabbet down the length of the workpiece, moving from right to left. As you approach the "stop" mark, feed the workpiece very slowly. As the bit begins to break into the dado, it'll have a tendency to jump forward and cut too far.

These double-stopped rabbets are only cut on the back edges of the top and bottom pieces (B). The rabbets on the sides (A) don't have to be stopped, see Fig. 3.

ASSEMBLY. Now the six pieces of the cabinet can be dry-clamped to check for fit. After I got everything to fit, I cut a piece of ¾" scrap plywood exactly to the inside measurements of opening on one side of the unit. As you glue the unit together, use the plywood insert to keep the cabinet square as the clamps are tightened.

DRILLING TEMPLATE. After the cabinet is assembled, the next step is to make a drilling template to drill the holes for the shelf supports and the drawer runners.

To make this template, I used the piece of plywood that was used when the cabinet was clamped together. First, I laid out the position of the holes on the template, and marked the top and front edges on both sides, see Fig. 4. Then I used a Portalign attachment on a hand drill to drill the ¼" holes.

When the template is complete, clamp it to one of the inside faces of the cabinet, and use a Portalign to drill the ½"-deep holes. Then move the template to the other inside face, and eventually to both faces of the center divider. As the template is relocated, always keep the top of the template at the top of the cabinet, and the front of the template lined up with the front edge of the cabinet.

THE BASE. Now it's time to retrieve the 35⅝" piece of plywood that was set aside. Rip two 2½"-wide pieces for the base, and cut them to length, see Fig. 5.

After the pieces are cut to size, the corners are joined with a rabbeted tongue/dado joint. Then the base is assembled and set aside until after the shelves, drawers, and doors are cut, which should produce some scrap for the corner blocks.

VENEER TAPE. There are only two things left to do to the basic box and the base. First, apply veneer tape to all the exposed edges on the front and sides of the box, and the front edges of the base. (For more information on applying veneer tape, see Shop Notes on page 11.)

The last step is to cut a piece of ¼" plywood for the back, and tack it into place. (The back is cut from a 4x4 sheet of ¼" plywood. The left-over scrap is used for the drawer bottoms.)

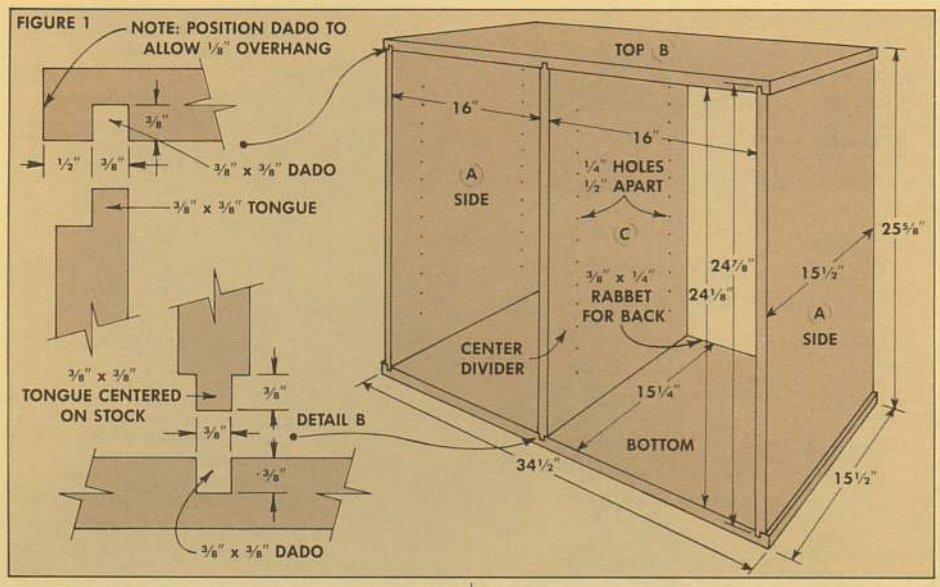

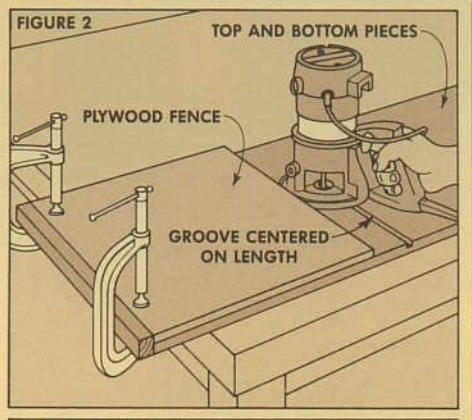

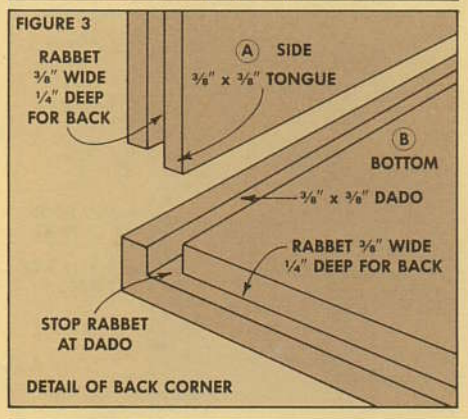

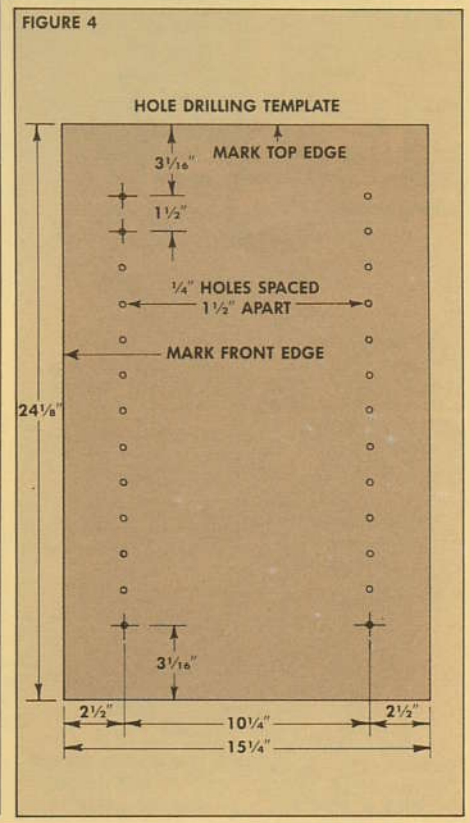

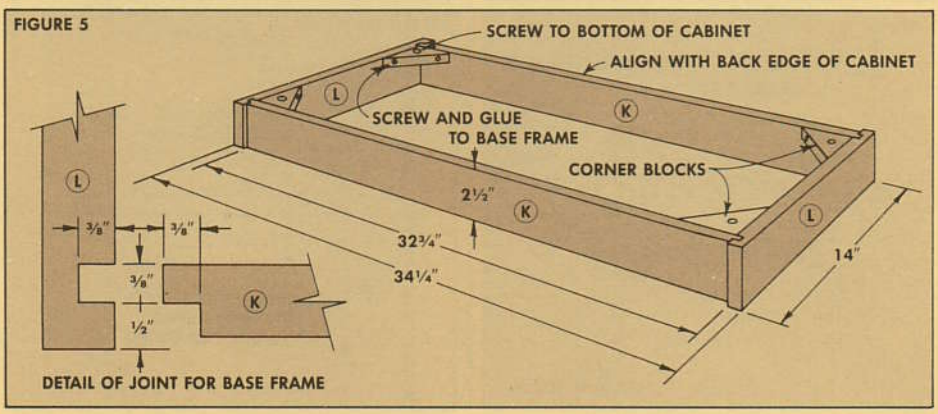

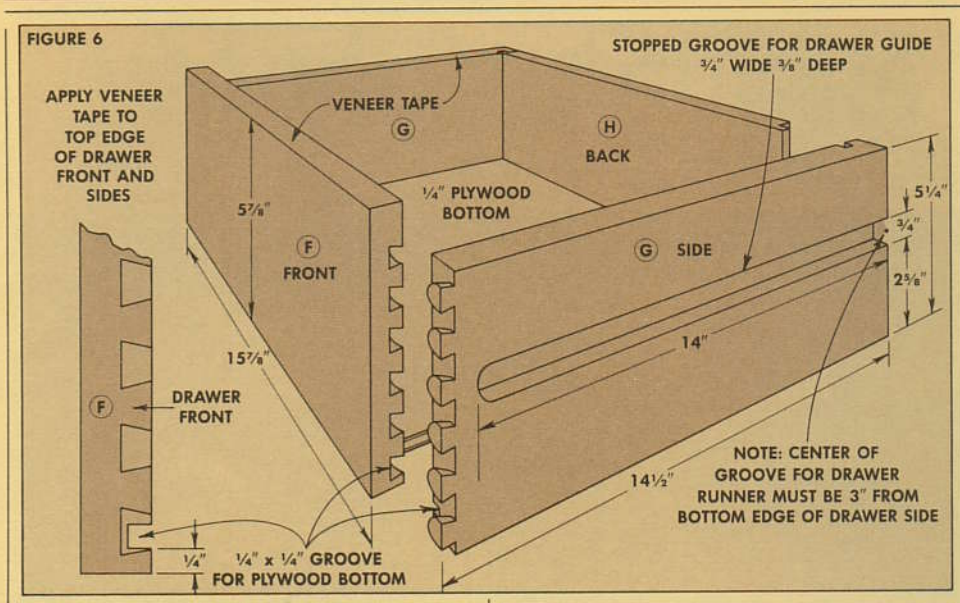

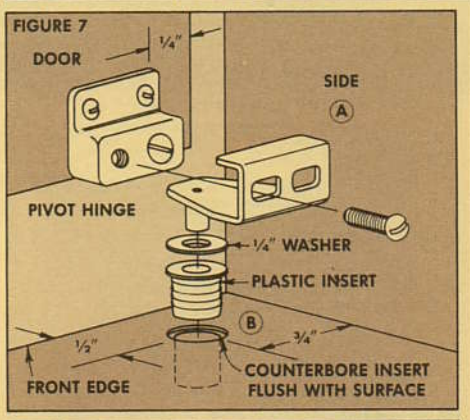

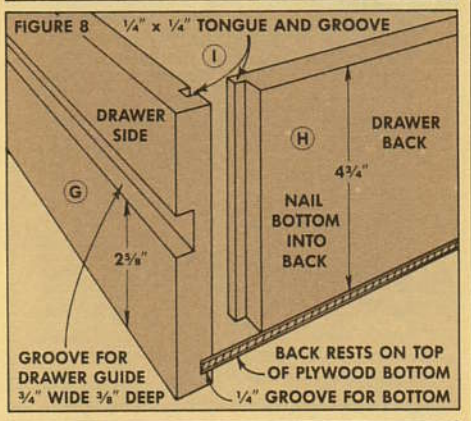

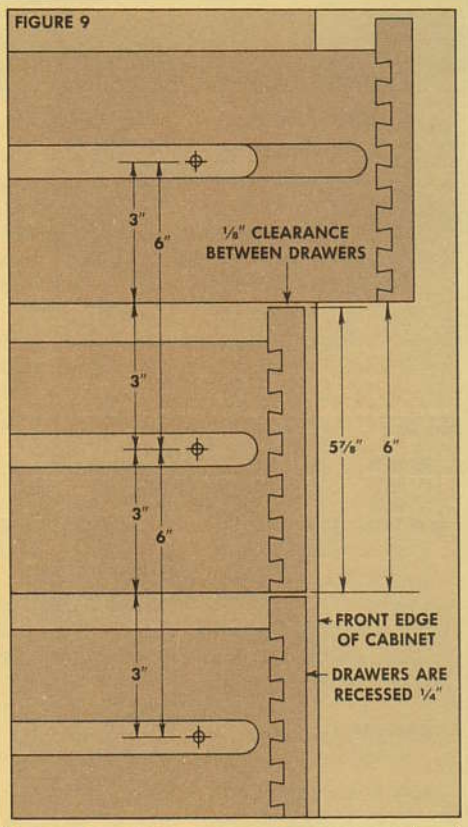

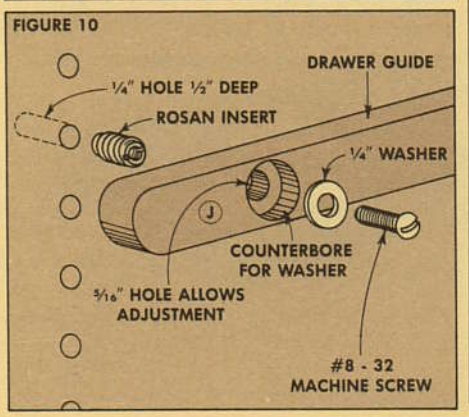

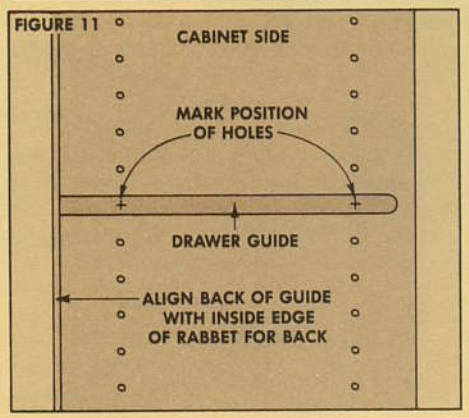

THE OPTIONS

Now it's decision time. The units are designed so that either the drawers, doors, or shelves will work in any position, and in any combination. The Cutting Diagrams show three possible combinations that can be cut from the plywood that remains after building the basic box.

THE SHELVES. The shelves (D) are the easiest of the three components to make. In fact, other than cutting them to size to fit the cabinet, all that needs to be done is to apply veneer tape to the front edge of each shelf. Then the shelves are mounted in the cabinet with small "paddle" shaped supports that fit in the ¼" holes.

RECESSED DOORS. The recessed doors are about as simple to make as the shelves thanks to a nifty little hinge called a pivot hinge. What really makes this hinge so special is that it only requires a 5/16" hole drilled in the cabinet (which translates into *no mortises*).

A plastic socket (that comes with the hinge) fits into this 5/16" hole. Normally, the shoulder on this socket provides a 1/16" clearance so the door doesn't rub on the cabinet. But in the event that the unit is rearranged so a door is replaced with drawers, I had to make a small change in the way this hinge is mounted.

To get the plastic socket out of the way, I had to recess it in a counterbore and add a small washer, see Fig. 7.

Now, the doors (E) can be cut to size, allowing for twice the total thickness of the washer, the pivot half of the hinge, and the veneer tape.

After the doors have been cut, apply veneer tape to all four edges. Then screw the stationary half of the hinge to the back of the door (see Fig. 7), and push the pivoting half of the hinge into the plastic socket.

THE DRAWERS

We laid out the cuts for the drawer fronts so there would be a continuous grain pattern from one to the next, see Cutting Diagram. Then, since we were making several drawers, we decided to use a router fixture to cut lap dovetails to join the drawer fronts to the sides.

However, there is one precaution when making these cuts. The drawer sides are about ¾" less in width than the drawer fronts. So, when cutting the lap dovetails (see page 6), be sure to use a stop on the dovetail fixture so only 6 sockets are cut on the drawer front (F) to match the 6 pins in the drawer sides (G), see Fig. 6.

DRAWER BOTTOM AND BACK. After the lap dovetails are cut, go ahead and cut the groove for the drawer bottom so it's centered on the bottom socket of the drawer front, see Fig. 6. Then cut the drawer back (H) to size (see Fig. 8) and join it to the sides with a rabbeted tongue/dado joint.

THE GROOVES. Finally, a groove must be cut in the drawer sides to accept the drawer guides. This groove is ¾" wide, ⅜" deep and is positioned on the drawer sides so that it's centered 3" from the bottom edge, see Fig. 8. The easiest way to cut this groove is on the router table, using a stop block to stop the groove just short of the dovetail pins, see Fig. 6.

After cutting a ¼" plywood bottom (I), the drawers can be glued up. Then the last step is to apply veneer tape to the top edges of the drawer's front and sides.

THE DRAWER GUIDE SYSTEM

I've mentioned how all the components are interchangeable, but the flexibility of the drawer guides is really the slickest part.

The drawer guides are held in place with a small bolt that screws into a threaded (rosan) insert. If you want to change the position of the drawer, all you have to do is unscrew the bolt and move the rosan insert to the new position.

CUTTING THE GUIDES. To make the guides (J), start by rounding over the end of a piece of hardwood that's about 15" long and 5" wide. (I used the router table and a ⅜" rounding over bit to do this.) The individual guides are then sliced off so they're about 1/32" *thicker* than the depth of the groove in the drawer sides, and then they're trimmed to fit the width of the groove.

To determine the length of the guide, insert it in the groove in the drawer side and mark where the guide meets the back edge of the drawer sides. Then cut it to this length.

MOUNTING THE GUIDES. To mount the drawer guides, counterbore a shallow hole for a washer, and then drill a 5/16" pilot hole for the #8-32 bolt that screws into the rosan insert, see Fig. 10.

MATERIALS LIST

Overall Dimensions:
28½"L x 34½"W x 15½"D

A	Box Sides (2)	¾" x 15½" - 24⅞"
B	Box Top/Bottom (2)	¾" x 15½" - 34½"
C	Center Divider (1)	¾" x 15¼" - 24⅞"
D	Shelves	¾" x 15¼" - 15⅞"
E	Doors	¾" x 15¾" - 23⅞"
F	Drawer Front	¾" x 15⅞" - 5⅞"
G	Drawer Sides	¾" x 5¼" - 14½"
H	Drawer Back	¾" x 4¾" - 14⅞"
I	Drawer Bottom	¼" x 15" - 14½"
J	Drawer Guide	Cut To Fit
K	Base Front/Back (2)	¾" x 33½" - 2½"
L	Base Sides (2)	¾" x 14" - 2½"
M	Box Back (1)	¼" x 33½" - 24⅞"

This 5/16" hole in the drawer guide is large enough so there's some "play" around the #8-32 bolt. When the guides are attached to the cabinet, they can be adjusted up or down so the drawers are evenly spaced, see Fig. 9.

FINISHING. We finished these units with Watco Danish Oil because it produces a nice natural finish and doesn't clog the holes in the cabinet.

THE HARDWARE

All of the hardware for the units came from two sources: *The Woodworkers' Store*, 21801 Industrial Blvd., Rogers, MN 55374, and *Woodcraft Supply Corp.*, 313 Montvale Ave., Woburn, MA, 01888.

From *The Woodworkers Store:*

For each *drawer* and each *door*: (1) Oak Wire Style Pull, Stock # D5620, $3.95@

For each *door*: (1) pr. Pivot Hinge for Wooden Doors, Stock # D5600, $1.95 pr. (1) Roller Catch, Stock # D4890, $.60@

For each *shelf*: (4) Shelf Supports, ¼" pins, Stock # D9154, $.12@

For each *unit*: (5) rolls Edgemate Wood Edging, $2.60 per 8' roll

From *Woodcraft Supply*:

For each *drawer*: (4) ¼" Outside Diameter Threaded Inserts, Stock #12K41-FT, $4.75ppd./25 inserts

NOTE: EACH UNIT REQUIRES ONE SHEET ¾" OAK PLYWOOD

CUTTING DIAGRAM

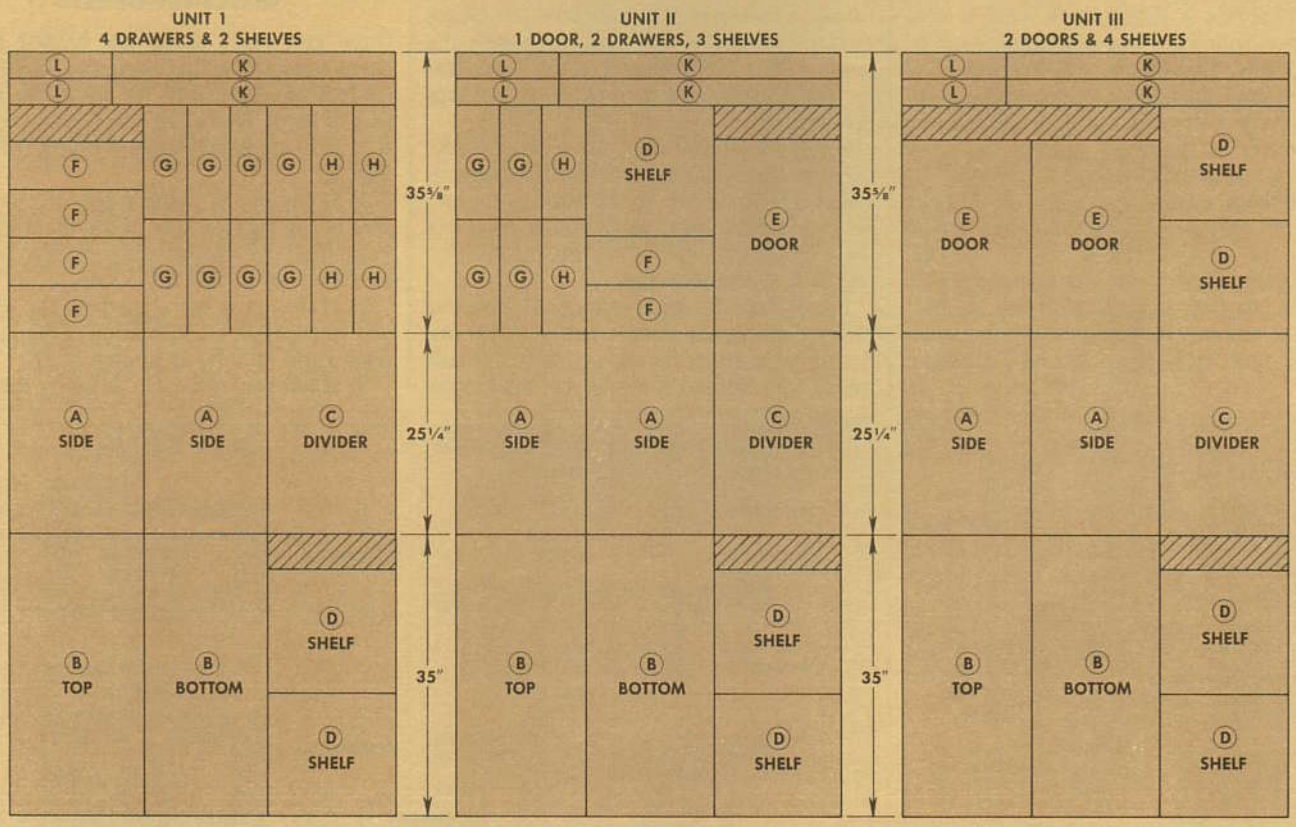

Router Table

NOW IT CAN STAND ALONE

When we built the bench-top router table (shown in *Woodsmith* No. 20), I thought it would be a helpful little addition to the shop. I was wrong. This router table has become almost indispensible. In fact, we've used it on almost every project we've built for the last three issues.

Okay, I'll stop the sales pitch. But I wanted to mention all of this for a reason. Once the router table was in operation for a while, we found that we were using it more (and for longer periods) than a router by itself.

This could present a problem. Most of the small (low-horsepower/low amperage) routers on the market today won't hold up to this kind of constant (prolonged) use.

With that in mind, we've been testing out several routers to see how they perform. The three we like the most are: Sears Craftsman 1 Hp. No. 315.17460, the Rockwell 7.5 Amp, No. 6751, and the Makita 8.5 Amp, No. 3601B.

Most of the time we use the Sears router — especially if we're working on something that requires frequent changing of bits. This particular Sears router is relatively new, and it has one very good feature. There's a lock/unlock switch that holds the collet in place when you want to change bits. This means you only need one wrench (and one hand) to tighten the collet nut. That's a great help, especially when the router is mounted under the table where it's a little awkward to get to.

This Sears router works fine most of the time, but when we know we're going to be giving the router table a good work-out, we usually switch to the Rockwell (which is now called Porter Cable) or the Makita. Both of these are commercial-duty machines, built to hold up during prolonged use.

THE BOTTOM LINE. All of that sounds great, Don. But what if I can't afford the luxury of having three or four routers in my shop?

I suppose it gets down to how much you plan to use the router (and the router table). I personally would buy the Sears router (when it's on sale). Although it's made with a lot of plastic, it's a good deal for the money, and it does what it's supposed to do.

However, if you do a lot of woodworking, I would seriously consider investing in either the Rockwell or the Makita router. As you might expect, both of these routers are a tad on the expensive side, but they're worth it in the long run.

PROBLEMS. Enough talk about routers. Now, back to the router table. After we featured the plans for the bench-top router table, we received some letters asking for clarification on how the fence is mounted in the guide slots.

Figure 1, below, should give a better picture of how the fence is mounted. The original design calls for cutting the table top 21" deep (from front to back), while the support arms are only 19" long. Since the support arms are mounted flush to the back edge of the table, this leaves a 2" gap on the front edge. The reason for this gap is to allow enough room for the carriage bolt and the plywood washer that hold the fence in place.

The fence is mounted to the table with 2"-long carriage bolts, wing nuts, and "shop-made" ¼" plywood washers. These plywood washers are cut to size to fit in the groove in the support arms. Then they're pressed over the square shoulders on the head of the carriage bolts.

Since there's no way to get a wrench inside the grooves (to hold the bolt when it's tightened), the plywood washer serves this purpose. The washer binds (twists against the sides of the groove) to stop the bolt from twisting as the wing nut is tightened.

DIRECTION OF FEED

Once you start using the router table, there's one thing that seems to cause some confusion (especially for me): the direction of feed. There are three general rules that help me keep things straight (refer to Fig. 2):

1) If the cut is being made on the *near side* of the bit (the side of the bit closest to you), feed the workpiece from right to left, as shown in 2a and 2d.

2) If the cut is being made in the *middle* of a workpiece, the direction of feed is also from right to left, as shown in 2b.

3) However, if the cut is being made on

FIGURE 1

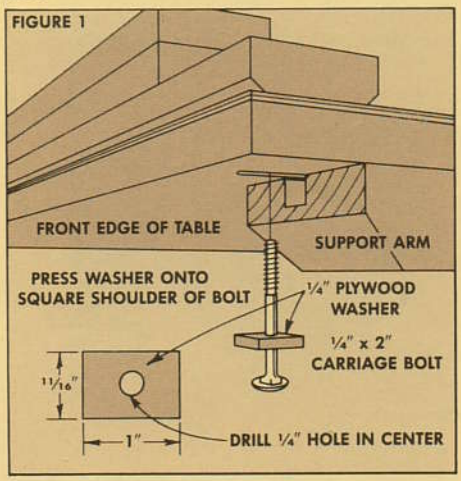

FIGURE 2

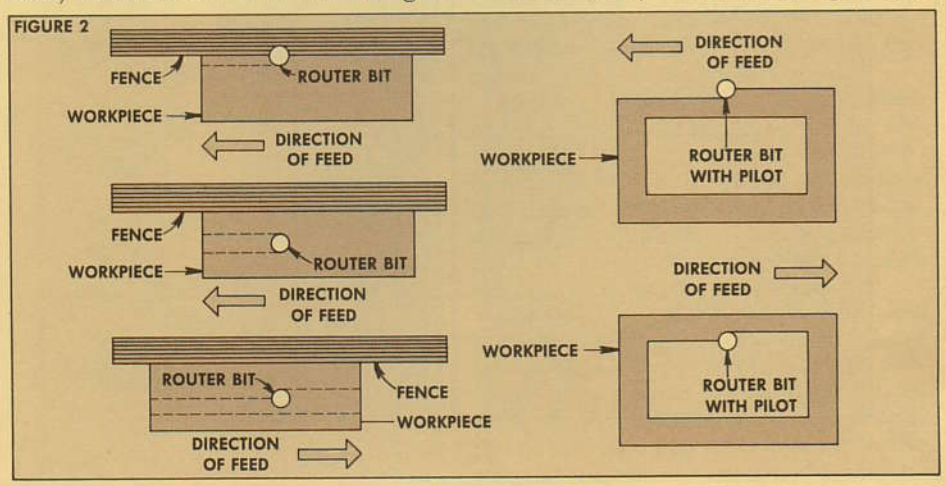

the *far side* of the bit (so the bit is between you and the cut), the direction of feed is from left to right, as shown in 2c.

LEGS AND STORAGE

After building the bench-top version, we quickly discovered that we wanted to make this router table a permanent member of the shop. So we added some legs and a storage cabinet for bits and attachments.

THE LEGS. The leg units consist of three pieces: two uprights and a pedestal. These three pieces can be cut from one 2x4, 8′ long. (So you need two 2x4s, one for each side.)

I started by cutting the legs to a length of 36″. However, the length of the legs can (should) be changed so *your* router table fits *you*. One way to judge the right height is to stand with both hands out — as if you were pushing a board along the top of the table. Hold that position, and with your third hand measure the distance to the floor. This should be the height that's right for you.

Once you've determined the table height, subtract 1″ (for the thickness of the top), and cut the legs to this length. Then cut half-lap joints at the top and bottom of each leg, see Fig. 4.

Note: The original design of the bench-top router table has a cross brace under the table top which will be in the way when you try to mount the legs. Trim about 1″ off each end of this brace so there's enough room to get the legs fastened to the support arms.

THE PEDESTALS. After cutting the legs, use the stock that remains to make the two pedestals. First, cut notches in these pedestals to mate with the half-laps in the legs. Then use ¼″ x 1½″ lag screws to fasten the legs to the pedestals and the support arms. (If your shop floor is uneven, it helps to tack small ¼″ plywood pads at both ends of the pedestals.)

STORAGE CABINET. To store router bits and attachments, I built a simple plywood box to fit between the legs. Note: this box also helps stabilize the legs. If you don't want to build the storage box, you should add cross braces to tie the legs together to prevent "racking."

The pieces for this box are cut from 2′ x 4′ sheet of ¾″ plywood, see Fig. 3. The length of the top and bottom pieces will probably have to be altered (from the dimensions shown) to fit your router table. Measure the distance between the legs (at the top), and cut the top and bottom pieces for the box to that measurement.

Next, cut the sides to size, and join them to the top and bottom with a simple rabbet joint, see detail in Fig. 3.

The last step is to cut two doors and mount them with butt hinges. Then the box is bolted to the legs with carriage bolts.

FIGURE 3

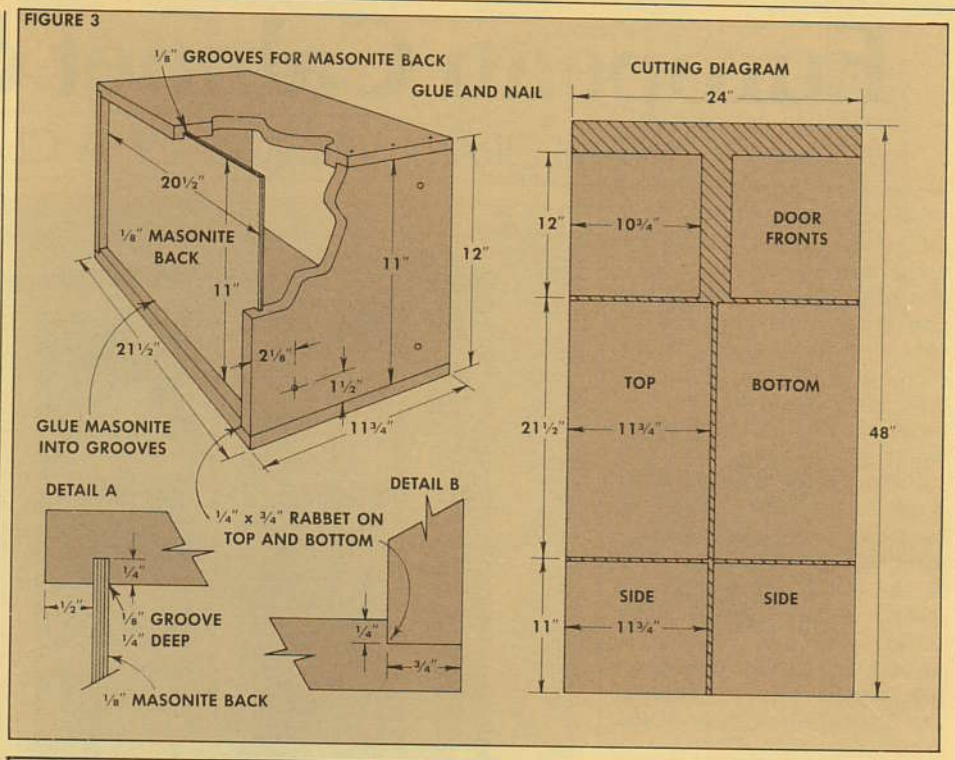

FIGURE 4

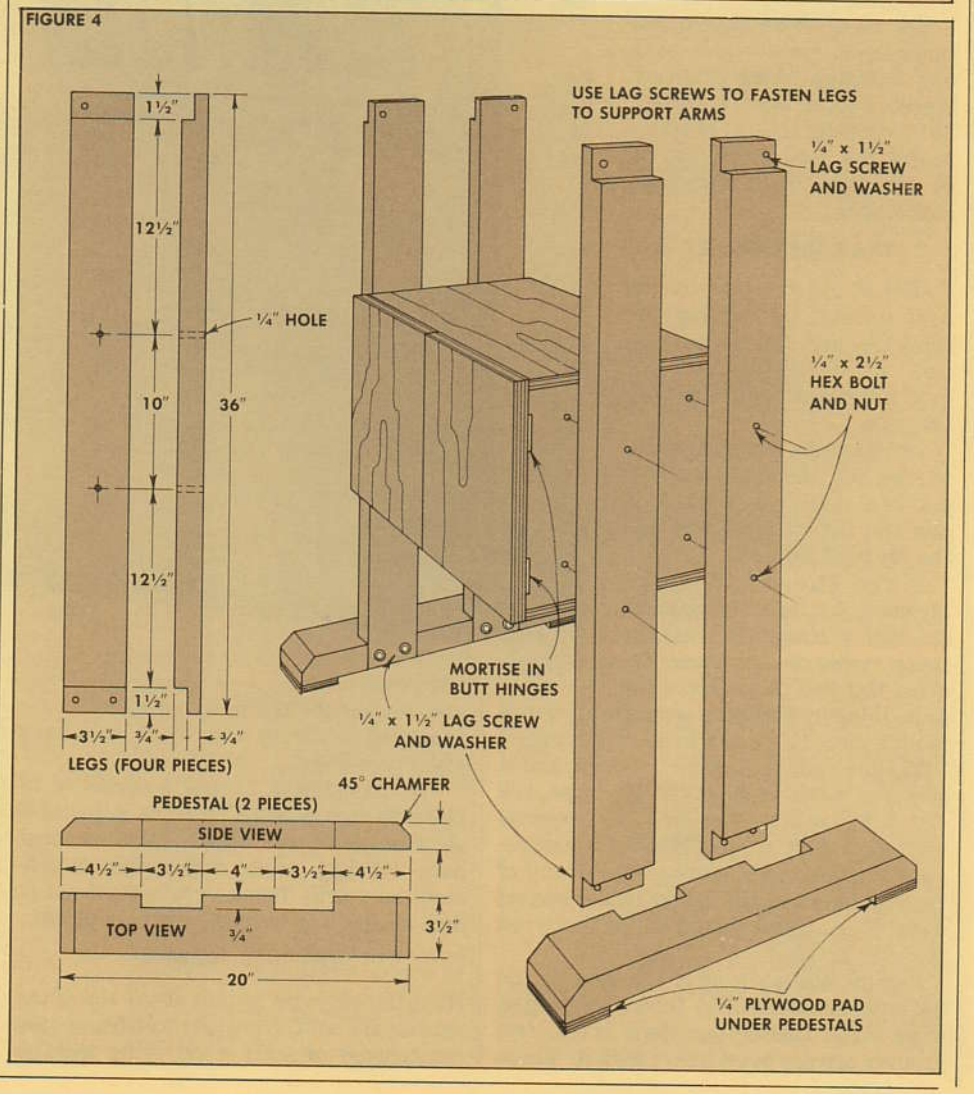

European Cabinet & Hutch

A CONTEMPORARY VERSION OF A CLASSIC CABINET

I feel right at home with this cabinet. I guess it's because the design combines all the things I like best. In fact, "combination" is sort of the key word for this project because it incorporates several different (yet compatible) design features and a full range of woodworking techniques.

For example, there are glass doors on the hutch, while the base cabinet has paneled doors using woven cane. The shelves in the hutch are stationary (they're set into dadoes), while the shelf in the base cabinet is moveable. And this whole project is built with a combination of oak-veneer plywood and solid oak.

Yet all of these design features seem comfortable with one another. And granted, there's a lot of work involved, but building this cabinet is really the best combination of all: it's both fun and challenging.

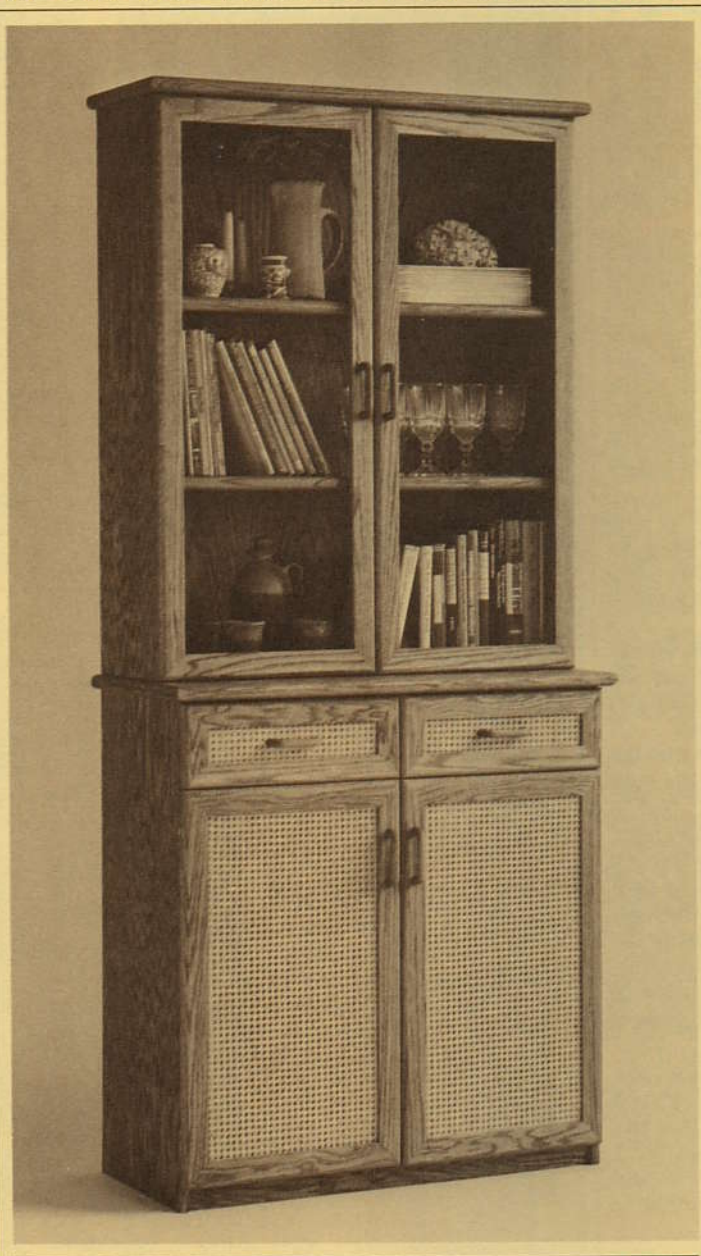

THE BASE CABINET

I started construction on the base cabinet by cutting the sides (A) and the bottom (C) out of a sheet of ¾" oak plywood, see Cutting Diagram.

THE DADOES. Once the sides (A) are cut, the next step is to cut three dadoes (see Fig. 1) to join the two web frames and the plywood bottom.

Since these sides are plywood, you'll get the cleanest cut with a router. (I used the router table to cut these dadoes. But you can achieve the same thing by clamping a temporary fence to each piece to guide a hand-held router.)

The top dado is ¼" wide, ¼" deep, and is centered ⅜" down from the top edge, see Fig. 3. The next dado is cut so it's centered 6⅝" below the top one. (This 6⅝" measurement is the distance between the center of the top dado and the center of the second dado. Thus, there should be 6⅜" between the two dadoes.)

Finally, there's a ¼" x ¼" dado on the bottom, centered 2⅛" from the bottom edge. After this bottom dado is cut, two grooves are cut to intersect with it. These grooves are for the base boards, and are centered ⅞" from the front and back edges, see Figs. 1 and 5.

The last step is to drill a series of ¼" holes in each side (A) for the adjustable shelf brackets, see Fig. 1. I drilled these holes ½" deep, using a Portalign attachment on a drill (being very careful not to drill all the way through the side piece).

THE WEB FRAMES

Next the two web frames at the top of the cabinet are built. Normally web frames are constructed of solid wood using mortise and tenon joints. But I had some ¾" plywood left over, so I used it instead of solid wood. Then to make the joinery a little easier (and much faster), I used a modified version of a mortise and tenon.

I started by cutting a total of four rails (E) 2" wide and 34" long from some of the plywood scrap, see Fig. 2. Then I cut the four end stiles (F) 2" wide and 11½" long, and two middle stiles (G) 4" wide and 11½" long.

All that's required to join these pieces is a groove in the rails (long pieces) and a "stub" tenon (which is just a simple tongue) on the ends of the stiles (short pieces). (Note: the dimensions given for the stiles include the amount necessary for the stub tenons.)

All ten of these pieces have a ¼" x ¼" groove cut down the center of the inside edge. This groove serves two purposes. On the top web frame, the groove is sort of a replacement for mortises. The same is true on the second web frame, except the groove also serves to hold the plywood dust panels in the frame.

After these grooves are cut, the rails are complete. Next you have to cut stub tenons on the ends of the stiles.

STUB TENONS. All six stiles have a ¼" long stub tenon cut at both ends to fit in the grooves. Cutting these tenons is simply a matter of cutting two rabbets (one on the top face and one on the bottom face) at both ends of the stiles. What's left is a stub tenon (or a tongue) that fits in the grooves.

Before assembling the two web frames, cut a notch exactly in the center of each of the rails (E), see Fig. 4. (This notch is needed to join the vertical divider stiles later.)

THE PANELS. Dry-assemble both web frames at this point, and get the measurements for the ¼" plywood dust panels for the second frame (the one below the drawers). Once these dust panels are cut, dry-assemble this frame once again to test the fit.

ASSEMBLY. Now go ahead and glue-up the two frames. After the glue is dry, both frames should be exactly the same size. If they're not, trim the largest one down to the same size as the smaller one.

Then cut the ¾" plywood bottom (C) to match the dimensions of the two web frames. (Also cut a notch centered on the front and back edges of the plywood bottom to match the notches in the frames.)

THE TONGUES. Now the two web frames and the plywood bottom need tongues on the ends to mate with the dadoes in the cabinet sides. Once again, cut two rabbets (one on each face) at both ends of these three pieces. This should leave a tongue that fits in the dadoes in the side pieces.

I used the router table to cut these tongues. But no matter what tool you use, it's best to make all the cuts at the same time. Since the two web frames and plywood bottom are trimmed to the same size to begin with, if the rabbets (tongues) are all cut the same, you'll be sure the measurement from the shoulder of one rabbet to the shoulder of the other rabbet is the same on all three pieces.

THE DIVIDER STILES. The last step is to cut two solid wood divider stiles (M) for the front and back of the cabinet. Half-laps are cut in these stiles to mate with the notches that were cut in the web frames and the plywood bottom. However, the half-lap should be cut so the face of the stile sticks out about 1/32" to allow for the thickness of the veneer tape that will be added to the front edge of the rails, see Fig. 4.

THE BASE BOARDS. The last step is to cut two base boards. As shown in Figure 5, these boards are trimmed so they're ¼" short of the bottom dado (to leave room for the plywood bottom).

ASSEMBLY. Now you're ready to glue-up the cabinet. This requires a lot of clamps. (I used eight pipe clamps in all.) The divider stiles should be put in place to hold the frames steady while tightening the clamps, but I didn't actually glue them in until later.

Now the base cabinet is complete, except for the plywood top. But before adding the top, I went to work on the hutch.

FIGURE 1

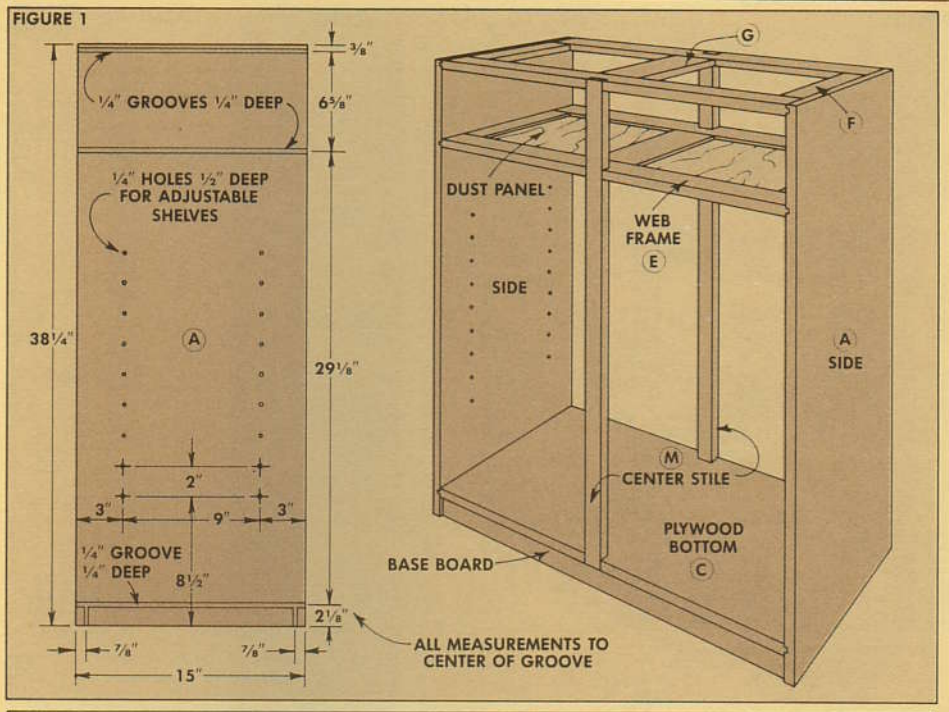

FIGURE 2

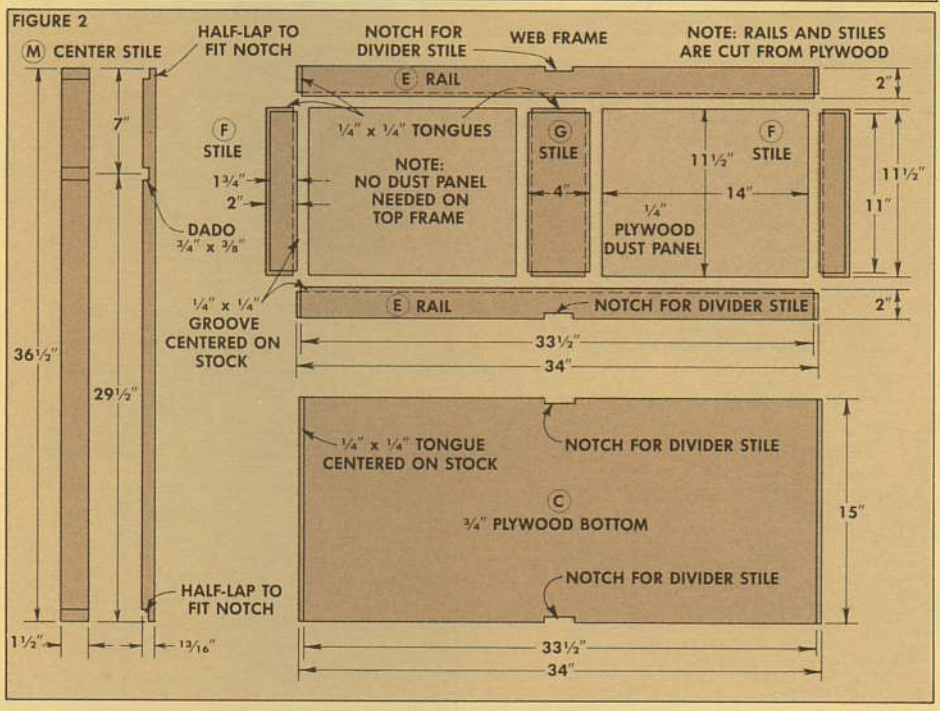

FIGURE 3

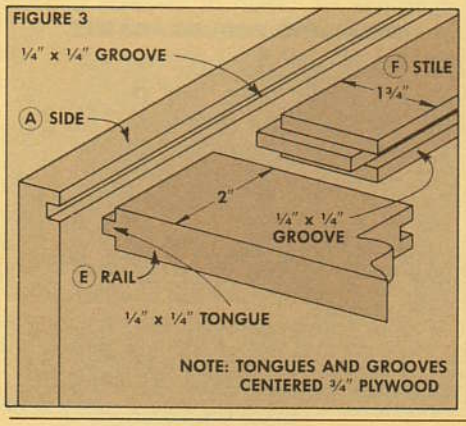

FIGURE 4

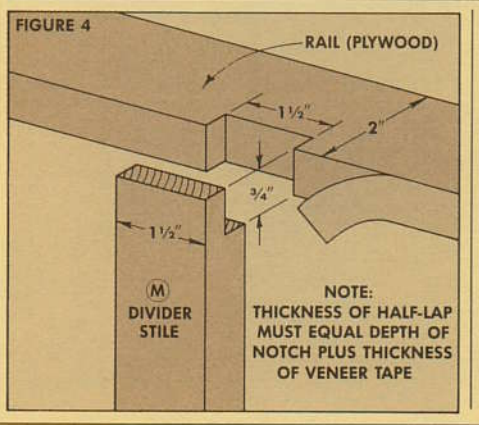

FIGURE 5

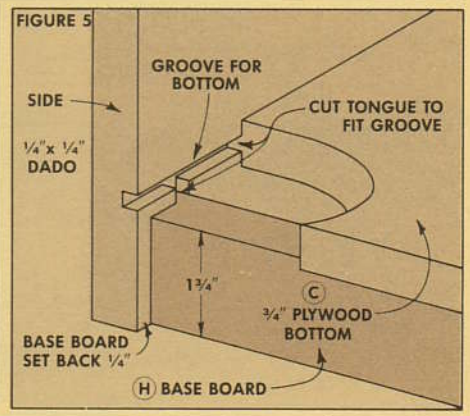

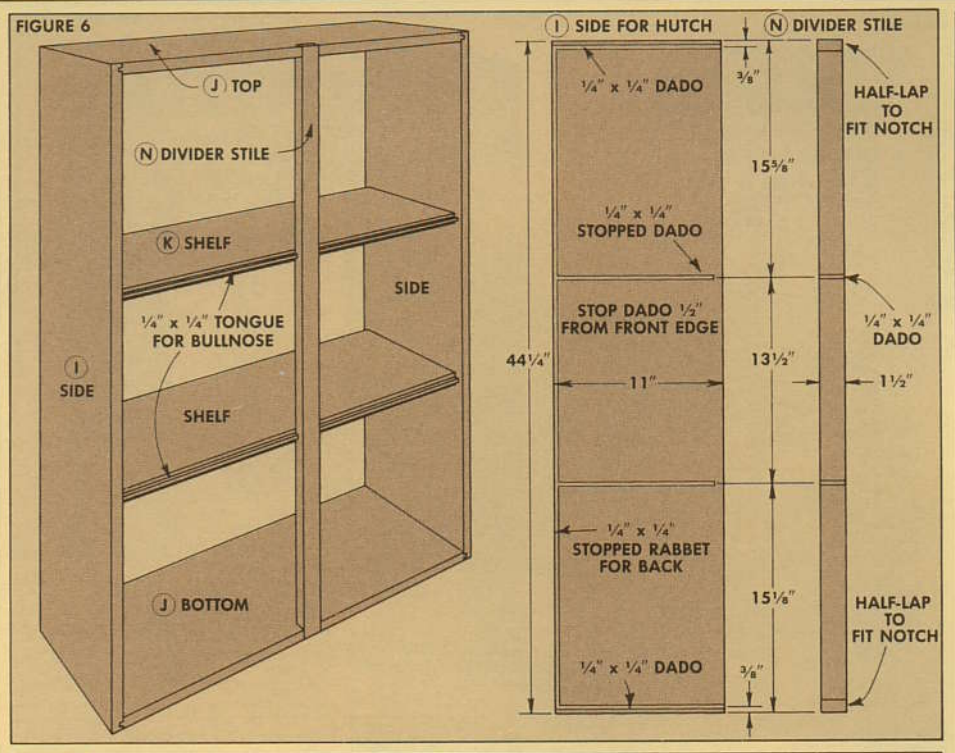

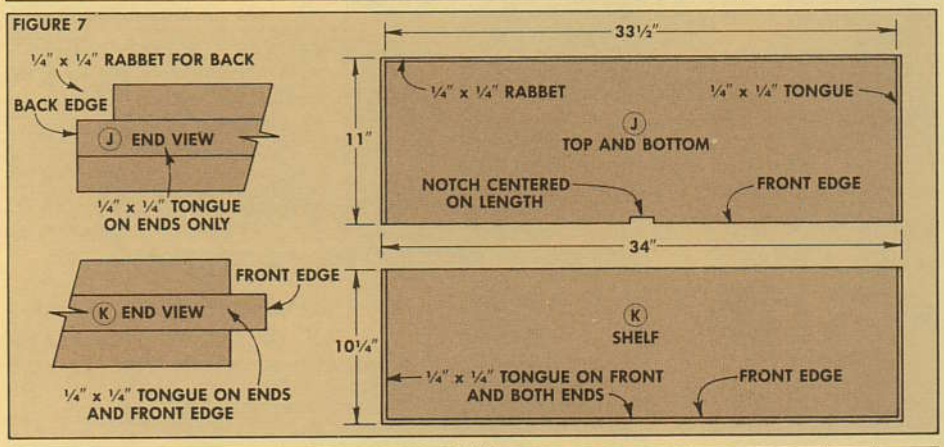

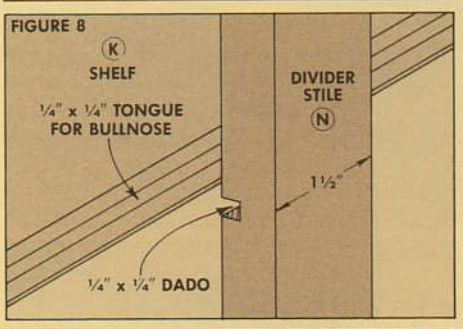

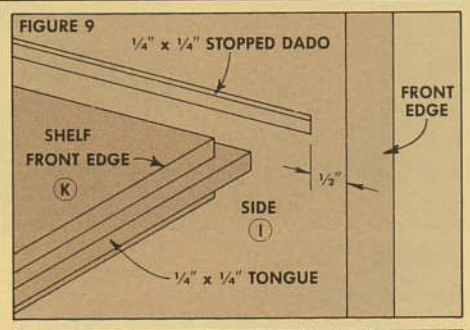

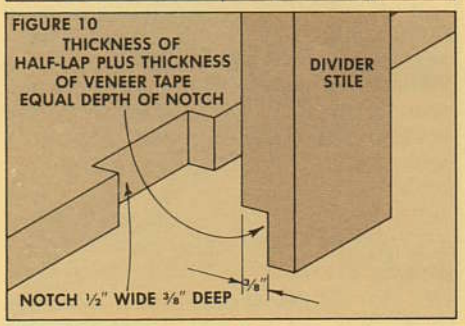

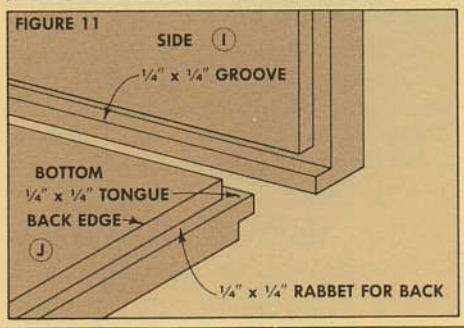

THE HUTCH

As with the base cabinet, the sides of the hutch are cut to size first. Then dadoes are cut for the hutch's top and bottom (J) and the two shelves (K), see Fig. 6. (Once again, all the measurements shown are to the center of the dadoes.)

CUTTING THE DADOES.. The dadoes at the top and bottom edge of the sides (I) are cut all the way through (from front to back), which is relatively easy to do on the router table, or with a router equipped with an edge guide.

However, the dadoes for the shelves are stopped ½" from the front edge, see Fig. 9. To ensure that the dadoes line up perfectly on both sides, I clamped the two sides together — back edge to back edge.

Then I clamped a fence across both of them to guide the router. With this method I had to plunge the router to start the cut ½" from the left edge, and then stop it ½" from the right edge.

THE TOP, BOTTOM AND SHELVES. Next, the plywood top and bottom (J), and the two plywood shelves (K) are cut to size. The length of these pieces should be exactly the same as the web frame and the plywood bottom on the base cabinet. This way you'll be certain the hutch is the same width as the base cabinet. (In fact, these pieces can be cut at the same time.) Then the double rabbets can be cut to form tongues to fit the dadoes.

RABBETS FOR BACK. The last step on the top, bottom, and the sides is to cut ¼" x ¼" rabbets are cut on the back edge for the plywood back, see Fig. 11. The only difficult part is cutting the rabbets on the sides because they must be stopped at both ends when they intersect with the dadoes.

TONGUE FOR BULLNOSE. The last step on the shelves (K) is to cut two rabbets — this time on the front edge of the shelves — to form tongues for the bullnose molding, see Fig. 9.

DIVIDER STILE. Before assembling the hutch, cut notches in the top and bottom (J) for the divider stile. Then go ahead and cut this stile (N) to length. Also cut half-laps to fit the notches, and dadoes to fit the tongues on the shelves, see Figs. 8 and 10.

DOOR AND DRAWER FRAMES

The hutch and the base cabinet have mitered frame doors, and the drawers have mitered frame false fronts, see Fig. 12. All of these frames are built the same way — with a miter/spline joint. (See *Woodsmith* No. 21 for complete step-by-step on cutting this joint.) Although the joinery for these frames is easy, getting them to fit exactly right can be a little nerve-racking.

I built each of these frames so they were just a scant 1/16" larger than needed. Once the pieces for the frames are mitered to

length, cut the grooves for the splines. Then cut a ¼" wide, ½" deep rabbet on the inside back edges of all the pieces. At last, the six frames can be glued up.

CANE PANELS. The frames for the base cabinet and the drawers have ¼" plywood panels, cut to fit loosely in the frames. These panels are covered with sheet (prewoven) cane. The best way to apply this cane to the plywood is to soak it in warm water until it becomes pliable (I let it soak for about 30 minutes).

Then while it's still wet, stretch it over the plywood and staple it down with a staple gun. I used a lot of staples, placing them shoulder to shoulder all around the perimeter of the plywood.

When the cane dries, it will stretch very tight and should be flat against the plywood. Then the panels can be mounted in the door and drawer frames with small wooden stops, see Fig. 13.

THE GLASS. I took the frames for the hutch to a local glass store and had them cut the glass to size. (Don't install the glass yet, the frames have to be trimmed first.)

TRIM TO SIZE. Once the four door frames are assembled cut mortises for the hinges. (There are two hinges on each of the base cabinet doors, and three hinges on each of the hutch doors.) Temporarily mount the frames to these hinges.

In the final stages of this project (after the drawers and bullnose molding are added) you have to trim all the frames to size. This is just a matter of using a hand plane to skim off just enough around the edges to allow clearance. After all the frames fit, round over the outside edges with a ½" corner-round router bit.

THE DRAWERS

The two drawers for the base cabinet are built of ½" stock. I used a router and dovetail fixture to cut lap dovetails to join the drawer fronts to the sides. Then I cut a rabbeted tongue/dado to join the drawer back to the sides, see detail, Fig. 15.

If you don't want to use lap dovetails on the drawer front, rabbeted tongue/dado joints can be used at all four corners.

Once the drawers are built, the false front is screwed in place. As shown in Figure 16, make sure the bottom edge of the frame extends ⅜" below the bottom edge of the sides of the drawer.

DRAWER GUIDES. The guide system for these drawers is easy. Simply cut a notch in the middle of the drawer back (before the drawers are assembled) and pop in a stem bumper (vinyl guide), or a thumb tack. Then cut two drawer guides (S) and mount them so they're exactly centered on the openings in the base cabinet, Fig. 14. I also added stem bumpers to both sides of the cabinet and the center divider stile.

THE TOPS. The cabinets are almost complete now. All you need is the top (B) for

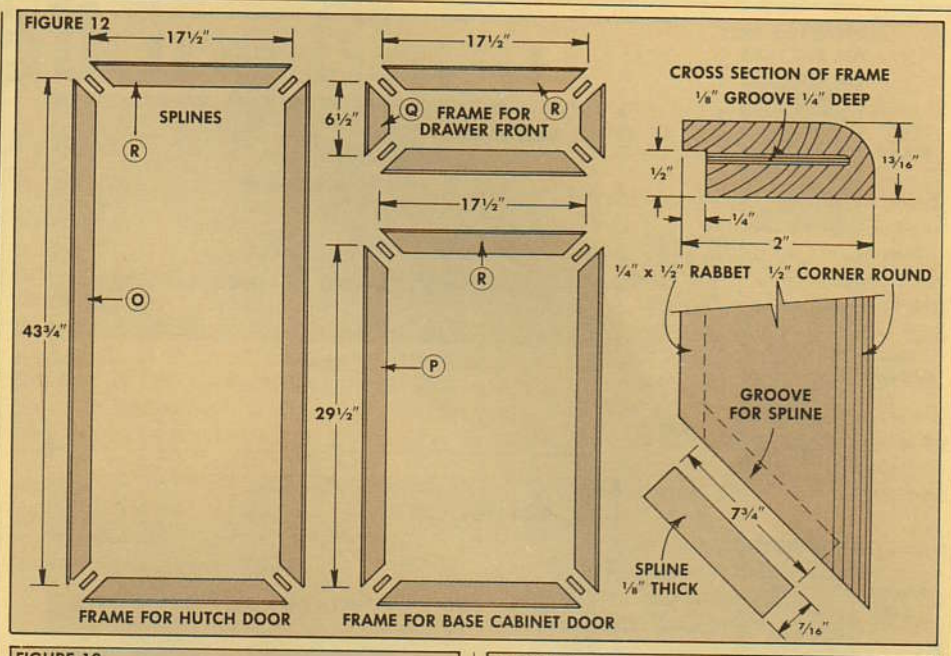

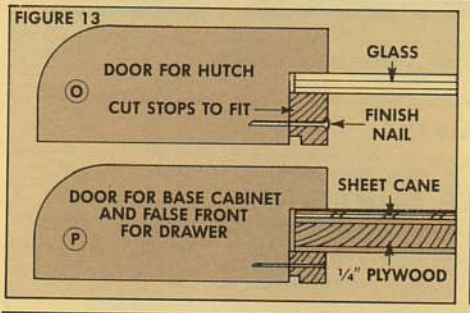

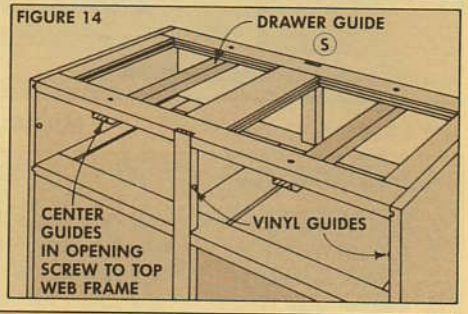

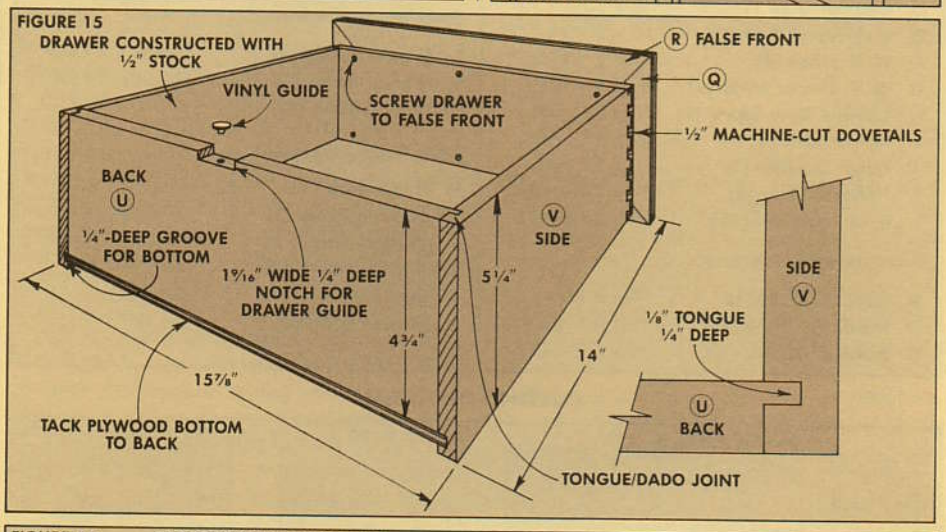

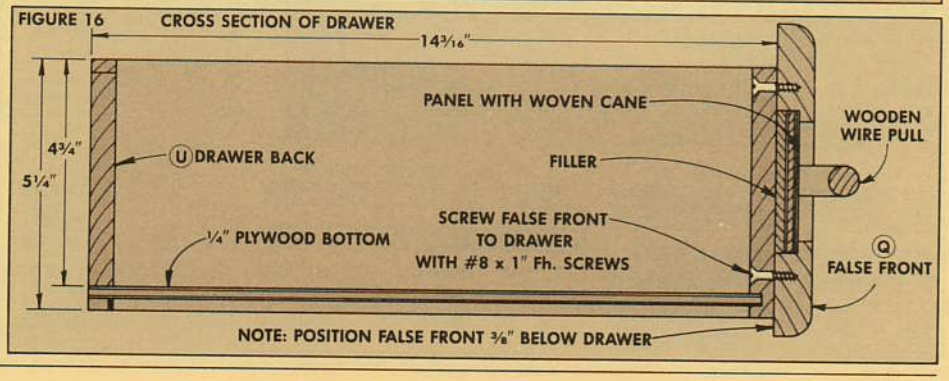

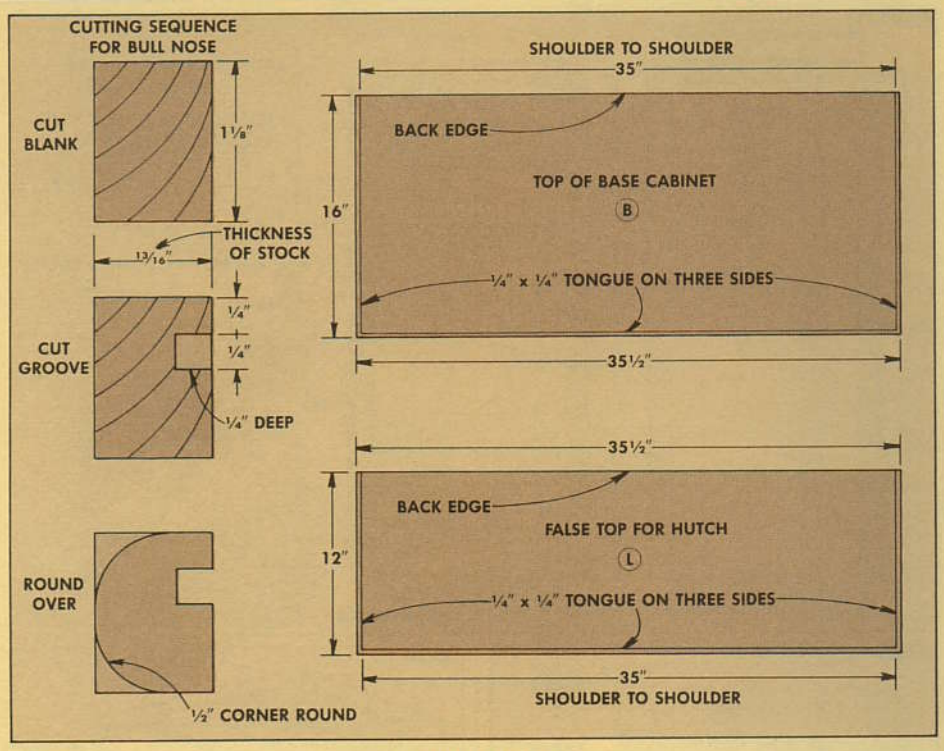

MATERIALS LIST

From the ¾" Plywood:		
A	Cabinet Sides (2)	¾ x 15 - 38¼
B	Cabinet Top (1)	¾ x 16 - 35½
C	Cabinet Bottom (1)	¾ x 15 - 34
D	Cabinet Shelf (1)	¾ x 33⅜ - 12
E	Web Frame Rails (4)	¾ x 2 - 34
F	W. F. Stiles (4)	¾ x 2 - 11½
G	W. F. Center Stiles (2)	¾ x 4 - 11½
H	Cabinet Base Board (2)	¾ x 34 - 1¾
I	Hutch Sides (2)	¾ x 11 - 44¼
J	Hutch Top/Btm (2)	¾ x 11 - 34
K	Hutch Shelves (2)	¾ x 10¼ - 34
L	Hutch False Top (1)	¾ x 35½ - 12
From the solid oak:		
M	Cab. Div. Stiles (2)	13/16 x 1½ - 36½
N	Hutch Div. Stile (1)	13/16 x 1½ - 44¼
O	Hutch Door Stiles (4)	13/16 x 2 - 43¾
P	Cab. Door Stiles (4)	13/16 x 2 - 29½
Q	Drawer Stiles (4)	13/16 x 2 - 6½
R	Door/Drawer Rails (12)	13/16 x 2 - 17½
S	Drawer Guides (2)	13/16 x 1½ - 15
	Bullnose molding	cut to fit
From the ½" Poplar:		
T	Drawer Fronts (2)	½ x 5¼ - 15⅞
U	Drawer Backs (2)	½ x 4¾ - 15⅜
V	Drawer Sides (4)	½ x 5¼ - 14
From the ¼" Plywood		
W	Hutch Back	¼ x 34 - 43¼
X	Cabinet Backs (2)	¼ x 16½ - 35½
Y	Cabinet Panels (2)	¼ x 14 - 26½
Z	Drawer Panels (2)	¼ x 14 - 3½
	Dust Panels	cut to fit
	Drawer Bottoms	cut to fit

CUTTING DIAGRAM

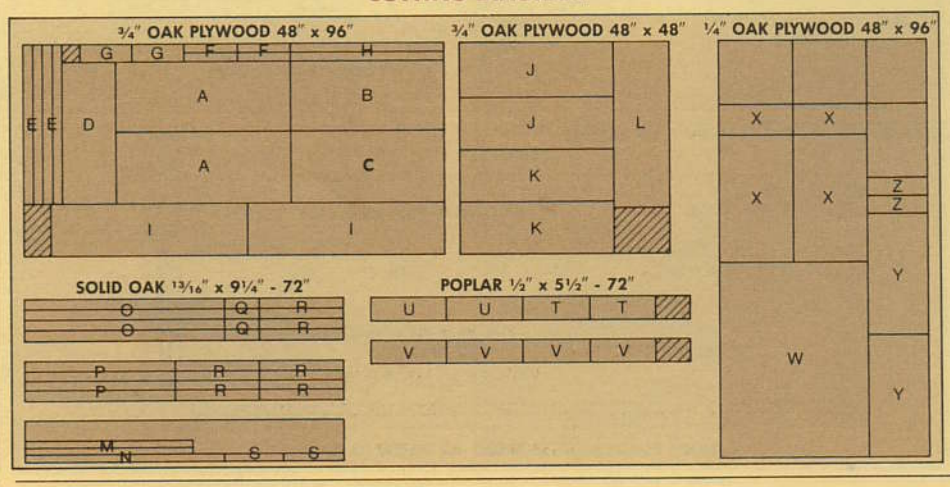

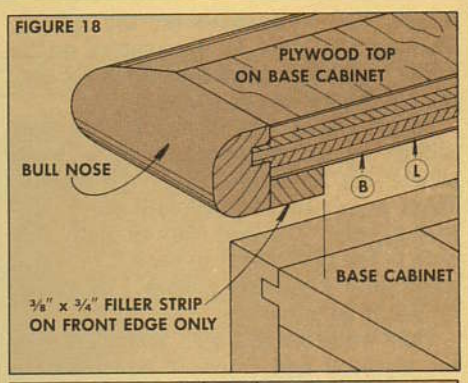

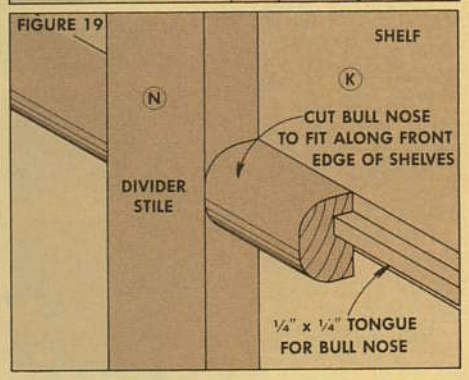

the base cabinet and the false top (L) for the hutch. To get the final length of both of these pieces, measure the width of the cabinet and add ½" (for the tongues). For the final width (front to back measurement) add ¼" for the tongue, and 13/16" for the thickness of the door frames.

BULLNOSE MOLDING. The exposed plywood edges of these two tops plus the hutch shelves (K) are concealed with shop-made bullnose molding. This molding is made in a three-step procedure, Fig. 17.

First cut long blanks. Then cut a ¼" x ¼" groove in these strips to mate with the tongues. The last step is to round over both front corners with a ½" corner round bit.

Now it's just a matter of cutting this molding to length and gluing it onto the tongues, see Figs. 18 and 19.

FINISHING. All other edges of the cabinet are covered with iron-on veneer tape. Then the tops are mounted and screwed into place. And finally, the shelf for the base cabinet is mounted with pop-in shelf supports.

To finish this project, I used Watco Medium Walnut oil (the stain is pre-mixed in the oil). I applied two coats of the pre-mixed (stained) oil, and then added a final coat of natural Watco oil.

SOURCES. We purchased the following items from The Woodworkers' Store catalog:

Sheet cane 64 linear inches (18" width): Cat. No. H1121, 49¢ per linear inch.

Drawer Pulls: Cat. No. D5620, $3.95 ea.

Edgemate veneer (4 kits): Cat. No. A2304, $2.60 per kit (8' length).

Stem Bumpers (vinyl guides) (10): Cat. No. D3503, 60¢ per 10.

Talking Shop

AN OPEN FORUM FOR QUESTIONS AND COMMENTS

TILELESS TRIVETS

In the tiled trivet project in *Woodsmith* No. 20, there was no listing for a source of supply for the tiles. I've been unable to find a supplier for them and would appreciate your help on locating a source.

Gerald F. Burris
Corning, New York

Your letter and several others kind of took us by surprise. The reason there was no listing in the article for a source of tiles is because we thought that they would be available locally. In our area there are several retail outlets for ceramic tiles (one is called Color Tile, which I think is a nation-wide chain).

You should be able to locate a ceramic tile outlet by looking in the Yellow Pages *of the phone book under Tiles-Ceramic.*

A mail order source for very unique tiles is: Country Floors, 300 E. 61st. St., New York, NY, 10021. Catalog: $5.00. They offer a large selection of imported and hand painted decorative tiles.

THE QUARTER SOLUTION

In *Woodsmith* No. 1, I read where you mentioned 5/4 pine is 1¼" nominal, and later in *Woodsmith* No. 11, 5/4 cherry is listed as 1 1/16" actual. For me this is quite confusing.

May I take the liberty to ask why you write 5/4 or 8/4 and then give the exact thickness of the lumber in inches?

Wm. V. Del Solar
Westmont, Illinois

To really answer your question, I'm afraid I'll have to answer two other questions first: What does the 4/4, 5/4, 8/4 designation mean? And how does it relate to the actual thickness of lumber?

First of all, the "quarter" terminology stands for the thickness of rough *lumber (as it comes from the mill). Traditionally, lumber is referred to by its rough thickness, in ¼" increments. So, a 1"-thick rough board is called 4/4 (pronounced four-quarter), and a 1¼"-thick board is called 5/4 (pronounced five-quarter).*

However, this designation is not the actual thickness of the lumber as it's sold on the retail market. Most lumber is surfaced at individual lumber yards.

After the lumber is surfaced, it still retains the same "quarter" terminology, even though the actual (nominal) thickness has changed. And this is where a lot of the confusion begins.

In order to assure the customer that he's actually comparing "apples to apples" from one yard to another, the lumber industry has established certain standards with concern to the thickness of surfaced lumber. Individual lumber yards are supposed to follow these standards. Usually they do, but sometimes they don't.

Then to add to this confusion, hardwoods, softwoods, and construction material (such as 2x4's) all have different sets of standards for surfaced thickness. And sure enough, some of the thickness terminology used for one standard is also used for another standard, even though they represent different surfaced thicknesses.

Rough Thickness	"Quarter" Designation	Surfaced Thickness
½"	*(½")	5/16"
¾"	*(¾")	9/16"
1"	4/4	13/16"
1¼"	5/4	1 1/16"
1½"	6/4	1 5/16"
2"	8/4	1¾"

*rough lumber less than 1" is expressed in inches

For example, clear pine has one standard (8/4 lumber is surfaced to 1 13/16"), hardwoods have another standard (8/4 lumber is surfaced to 1¾"), and construction grade materials (2x4's) have yet another standard (8/4 lumber is surfaced to 1½"). This is why the 5/4 pine in your question has a different actual (or nominal) thickness than 5/4 cherry.

When we list the thickness of a board in Woodsmith, *we try to include the "quarter" or inch designation along with the actual thickness (the industry standard for surfaced lumber) in inches so you know what you need to buy for the project. The accompanying chart lists a few examples of the standard thicknesses for hardwoods.*

A BETTER EDGE

I enjoyed your latest issue of *Woodsmith* (No. 21), and as usual, I found your tips and techniques most worthwhile. I would like to add a suggestion that your readers may find helpful.

Your advice for grinding and maintaining the domed scraper depends too much on living with the manufacturer's supplied grinding surfaces. For the most part, this is a relatively coarse grinding and when combined with the relatively coarse grinding on the bevel, produces a fragile raised burr. A simple inspection with a ten power glass will show this inconsistent (sawtooth) edge. With a high carbon steel tool in a highly resinous wood, an edge produced this way breaks down quickly.

One solution I've found is to take a newly acquired tool and hone/polish the top or unbeveled side to a mirror surface (only an inch or so needs to be honed). This leaves a well consolidated edge for all future grindings.

The edge too should be ground on a fine belt or wheel to produce a smaller sawtooth "wire" edge. An edge produced in this way both lasts longer and allows the user to make fine finish cuts which will require less sanding.

Ronald R. Roszkiewicz
Catalog Director
Woodcraft Supply Corp.

THE S.S. WOODSMITH

I've reviewed all the back issues of *Woodsmith* looking for an article on boat-riggings, block and tackle, goosenecks, and etc. Unfortunately, I haven't found any. How about some articles in the future?

James Planck
Atlanta, Georgia

Well you're right about not finding anything in Woodsmith *about boats (or are they called ships?). To be perfectly honest, we don't know the first thing about them. And the only real experience we've had with a boat is with the one that we find ourselves in when we go up that particular creek without a paddle.*

There is a bright side to your problem, though. WoodenBoat *is a magazine that's published in Maine that deals with the design, construction, and care of wooden handcrafted boats. This is an excellent publication and we recommend it very highly to anyone interested in woodworking as it applies to boat building.*

Their subscription rate is $15 for one year (6 issues). For more information, contact WoodenBoat, *P.O. Box 78, Brooklin, Maine 04616.*

Just for the heck of it, I looked in a dictionary to find out what a gooseneck is and it said that it's something that's curved like the neck of a goose, as in a drain pipe. I think we had one of those on our trip up the creek. — S.K.

Dovetail Lamp

SHED SOME LIGHT ON THE DOVETAILS

This is an unconventional use of the dovetail joints to say the least. But we thought that it was time to bring the dovetails out of the drawer, and into the light.

The first step for the lamp base is to rip a 9″ wide, 22″ long board into two 4⅜″-wide pieces. (The width of these pieces must be a multiple of ⅞″ so there's a half pin on both edges of the joint.)

Then cut each board into four pieces, 5″ in length. To get a continuous grain pattern around each base, number each piece consecutively, and label the top edge of each one.

The next step is to set up the router template jig as described on page 6. All of the pieces receive tails on one end and sockets on the other.

Start by placing piece #1 on the top of the jig (as if it were a drawer front), and piece #2 on the front of the jig (as if it were the drawer side).

The side of each piece that's labeled should be facing outward, and the top edge should be against the guide pins.

After these two pieces have been routed, remove piece #1 and set it aside for now. Then move piece #2 to the top of the jig and mount piece #3 in the front of the jig.

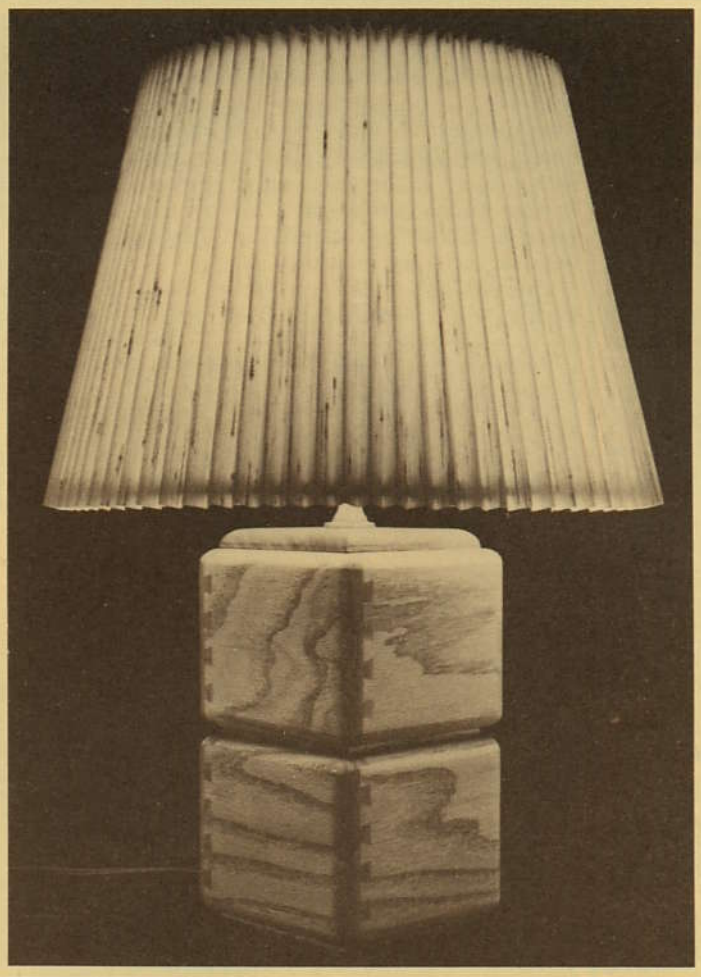

When piece #4 is finally moved to the top of the jig, retrieve piece #1 and insert it in the front of the jig to complete the box. Then the second box is made the same way.

Once the boxes have been routed, glue them together and round over all the edges with a ½″ corner round bit.

To make the top, the center divider, and the bottom, first cut three pieces to ½″ larger than the openings in the boxes. Then rabbet all three pieces, see Details A, B and C. Finally, the edges of the top piece are rounded over with the ½″ corner round bit, and the edges of the bottom piece are slightly chamfered.

To mount the lamp, we used a hollow, threaded rod. On the top end of the rod, there's a decorative sleeve that fits between the light fixture and the base.

On the bottom end, there's a nut attached to the rod (it fits into the counter sunk hole, Fig. 1) to pull everything together.

All of these parts can be found at any local lamp store.
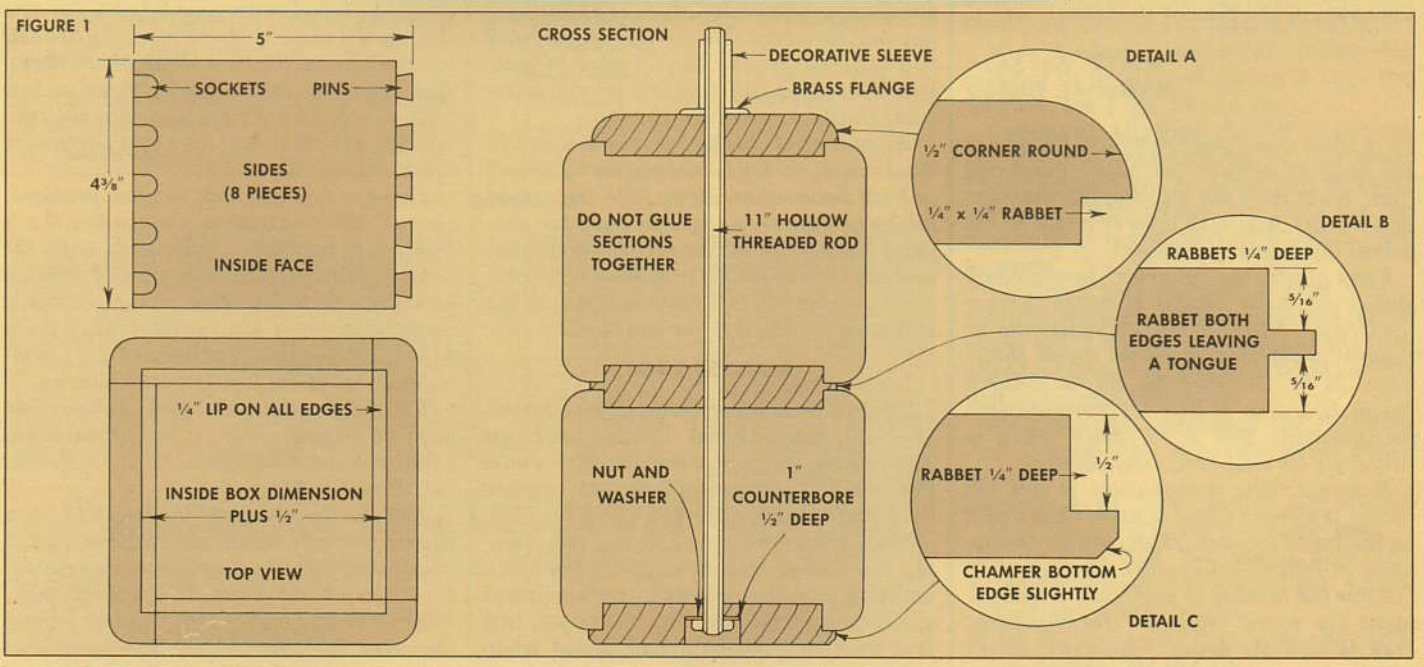
FIGURE 1